State of Alaska

Department of Transportation and Public Facilities
Southeast Region

As-Built
Contractor: Pacific Pile & Marine
PE: Steve Mielke
Begin Date: 6/18/2013
End Date: 1/27/2014

WRANGELL FERRY TERMINAL IMPROVEMENTS
WRANGELL, ALASKA

PROJECT No.
SHAK-MGE-STP-0943(25)/69432

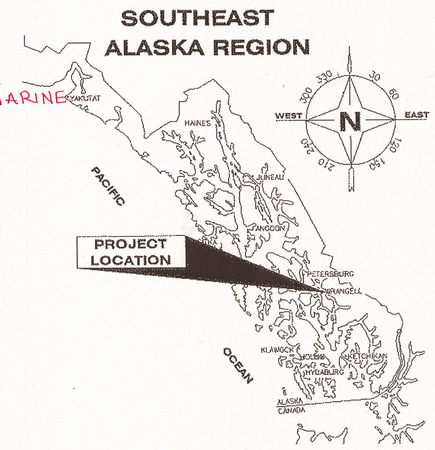

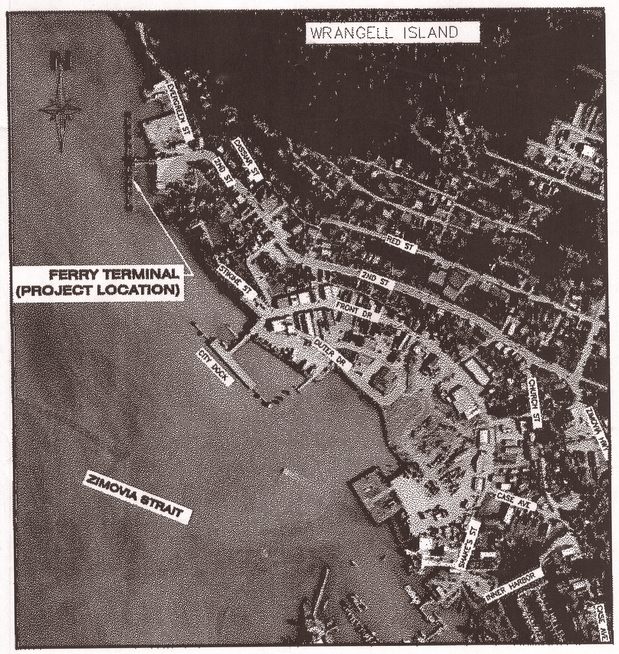

VICINITY MAP

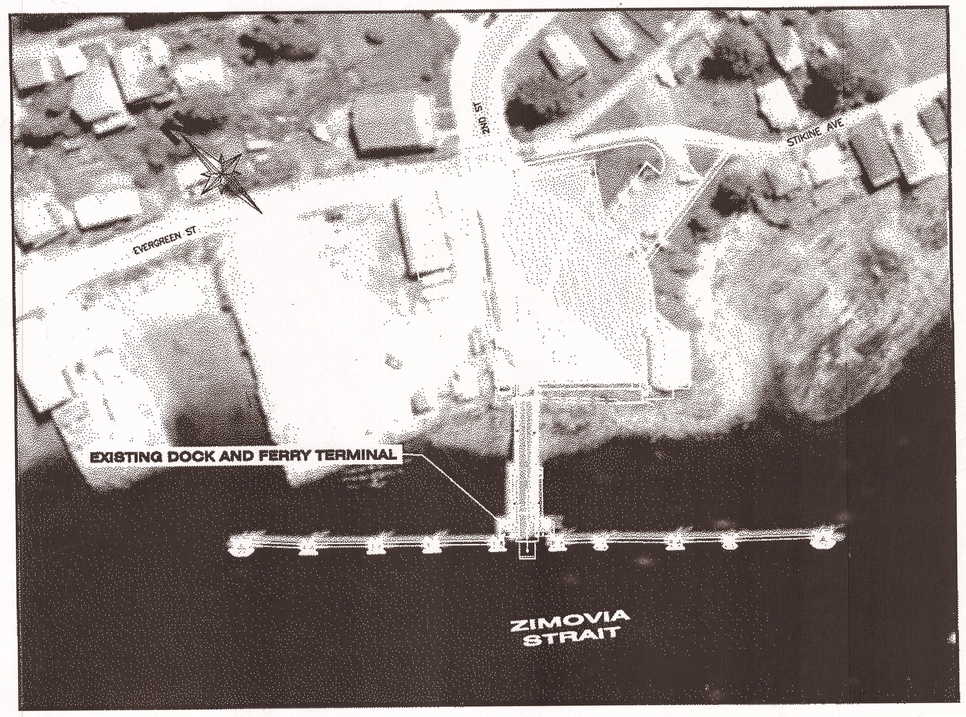

EXISTING TERMINAL SITE

Project As Built Drawings have been reviewed by the Project Engineer. To the best of his/her knowledge, they represent the project as constructed.

Proj. Eng _____ Date _____

SHEET INDEX

SHEET NO.	DESCRIPTION
1	TITLE SHEET
2	ESTIMATE OF QUANTITIES & GENERAL NOTES
3	SITE PLAN
4	DOLPHIN PLAN & PROFILE & PILE DATA TABLE
5–7	FENDER PANELS DOLPHINS S1–S2 & N1–N3
8–10	DOLPHIN S2
11	ANCHOR DETAILS DOLPHIN S2
12	S2–S3 CATWALK MODIFICATIONS
13–15	LIFT BEAM
16	ANODE DETAILS & N1–N2 CATWALK MODIFICATIONS
17	PURSERS SHELTER
18–20	BRIDGE SECURITY FENCE
21	ELECTRICAL MODIFICATIONS

Record Drawings have been reviewed by the Project Engineer, and represent to the best of my knowledge, the project as constructed.
PE Steve Mielke Date 9/21/17

PATH: Z:\PLANSET\WF\1_TITLE SHEET.DWG
Monday, August 20, 2012 9:00:50 AM

STATE OF ALASKA
DEPARTMENT OF TRANSPORTATION & PUBLIC FACILITIES
SOUTHEAST REGION

STATE OF ALASKA 49th TIMOTHY H DOGGETT CE-9027 REGISTERED PROFESSIONAL ENGINEER
10/02/2012

TIDAL DATA	
HTL	+22.0'
MHHW	+15.7'
MLLW	0.0'
ELW	−4.7'

APPROVED: for 10/2/12
REGIONAL PRE-CONSTRUCTION ENGINEER — DATE
CHUCK CORREA, P.E.

APPROVED: 10.2.2012
DIRECTOR, SOUTHEAST REGION — DATE
ALBERT H. CLOUGH, CPG

CERTIFIED TRUE & CORRECT AS-BUILT OF ACTUAL FIELD CONDITION:

CONSTRUCTION PROJECT MANAGER — DATE

STATE	PROJECT DESIGNATION	YEAR	SHEET NO.	TOTAL SHEETS
ALASKA	69432 SHAK-MGE-STP-0943(25)	2012	1	21

ESTIMATE OF QUANTITIES

ITEM NO	PAY ITEM	UNIT	QUANTITY
202 (1)	DEMOLITION & REMOVAL	LS	ALL REQ'D
202 (13)	TERMINAL CLOSURE PRICE WITHHOLDING	CS	~~ALL REQ'D~~ 0
504 (3a)	Underwater Survey & Debris Removal (N2), C01	LS	ALL REQ'D
504 (1)	TRANSFER BRIDGE LIFT BEAM REPLACEMENT	LS	ALL REQ'D
504 (2)	EXISTING CATWALK MODIFICATIONS	LS	ALL REQ'D
504 (3)	EXISTING FENDER PANEL SYSTEM REPLACEMENT	EA	4
504 (4)	NEW FENDER PANEL SYSTEM (S2)	EA	1
504 (5)	NEW DOLPHIN CAP (S2)	EA	1
504 (6)	TRANSFER BRIDGE SECURITY GATE & FENCE	LS	ALL REQ'D
504 (7)	ELECTRICAL CONDUIT SUPPORTS	LS	ALL REQ'D
504 (8)	DOLPHIN CAP BONDING CABLE	EA	10
504 (9a)	Underwater Debris & Steep Slope (S2), C02	LS	ALL REQ'D
505 (1)	18"x1/2" WALL PIPE PILE, FURNISHED	LF	245
505 (2)	18"x1/2" WALL PIPE PILE, DRIVEN	EA	3
505 (3)	24"x3/4" WALL PIPE PILE, FURNISHED	LF	622
505 (4)	24"x3/4" WALL PIPE PILE, DRIVEN	EA	10
505 (5)	DRILLED ROCK SOCKET	EA	10
505 (6)	ANODE, FIELD INSTALLED	EA	~~66~~ 69
505 (7)	ANODE, SHOP INSTALLED	EA	10
505 (9)	Cap Safety Chains, C03	LS	ALL REQ'D
518 (1)	TENSION PILE ANCHOR	EA	3
640 (1)	MOBILIZATION & DEMOBILIZATION	LS	ALL REQ'D
640 (4)	WORKER MEALS & LODGING OR PER DIEM	LS	ALL REQ'D
641 (1)	EROSION & POLLUTION CONTROL ADMINISTRATION	LS	ALL REQ'D
641 (2)	TEMPORARY EROSION & POLLUTION CONTROL	CS	~~ALL REQ'D~~ 0
642 (1)	CONSTRUCTION SURVEYING	LS	ALL REQ'D
644 (1)	FIELD OFFICE	LS	ALL REQ'D
644 (8)	VEHICLES AND SKIFF	LS	ALL REQ'D
662 (1)	ELECTRICAL ENGINEERING DESIGN	LS	ALL REQ'D
662 (2)	CATWALK LIGHTING SYSTEM MODIFICATIONS	LS	ALL REQ'D
662 (3)	TRANSFER BRIDGE ELECTRICAL CONDUITS REFURBISHMENT	LS	ALL REQ'D
662 (4)	PURSER'S SHELTER ELECTRICAL SYSTEM	LS	ALL REQ'D
662 (2a)	Catwalk Lighting System Upgrade, C03	LS	ALL REQ'D
695 (1)	PURSER'S SHELTER REPLACEMENT	LS	ALL REQ'D

ABBREVIATIONS

AASHTO	AMERICAN ASSOC OF STATE HIGHWAY & TRANSPORTATION OFFICIALS
ABUT	ABUTMENT
ACZA	AMMONIACAL COPPER ZINC ARSENATE
AISC	AMERICAN INSTITUE OF STEEL CONSTRUCTION
ALUM	ALUMINUM
ASTM	AMERICAN SOCIETY FOR TESING & MATERIALS
ASSY	ASSEMBLY
ATS	ALASKA TIDELAND SURVEY
AWS	AMERICAN WELDING SOCIETY
BOP	BEGINNING OF PROJECT
BRG	BEARING
BTM	BOTTOM
BTWN	BETWEEN
C/C	CENTER TO CENTER
CJP	COMPLETE JOINT PENETRATION
CL	CENTERLINE
CLR	CLEAR
CNTR	CENTER
CONC	CONCRETE
CS	CONTINGENT SUM
CTSK	COUNTERSINK
CU	CUBIC
CVN	CHARPY V-NOTCH
DBL	DOUBLE
DL	DEAD LOAD
EA	EACH
ECON HD	ECONOMY HEAD
ELEV	ELEVATION
EQ	EQUAL
FB	FLAT BAR
FS	FAR SIDE
GALV	GALVANIZED
GR	GRADE
HDG	HOT DIP GALVANIZE
HDPE	HIGH DENSITY POLYETHYLENE PLASTIC
HRZ	HORIZONTAL
HSS	HOLLOW STRUCTURAL SECTION
LF	LINEAR FEET
LS	LUMP SUM
MI	MALLEABLE IRON
NS	NON-SHRINKING, OR NEAR SIDE
OC	ON CENTER
OPP	OPPOSITE
PL	PLATE
PP	PIPE PILE
QTY	QUANTITY
R	RADIUS
REQ'D	REQUIRED
SS	STAINLESS STEEL
STD	STANDARD
SYMM	SYMMETRIC
T&B	TOP AND BOTTOM
TYP	TYPICAL
UHMW	ULTRA HIGH MOLECULAR WEIGHT POLYETHYLENE PLASTIC
UON	UNLESS OTHERWISE NOTED
WP	WORK POINT
XS	EXTRA STRONG (PIPE)
XXS	DOUBLE EXTRA STRONG (PIPE)

GENERAL NOTES

DESIGN SPECIFICATIONS
PER CONTRACT DOCUMENTS FOR PROJECT NO. 69432

DESIGN STANDARDS: AISC STEEL CONSTRUCTION MANUAL 14TH ED. LRFD
AASHTO LRFD BRIDGE DESIGN SPECIFICATIONS 5TH ED. W/ 2010 INTERIM REVISIONS

DESIGN LOADS: LIVE LOAD: BRIDGE – HL93 VEHICLE LOAD+IM

MATERIALS "BUY AMERICA" PROVISIONS APPLY

STEEL SHAPE & PLATES:

PLATES FOR BRIDGE MODS –	ASTN A709 GR 50
PLATES & SHAPES –	ASTM A36, UNLESS OTHERWISE NOTED
HOLLOW STRUCTURAL SECTIONS –	ASTM A500 GR B
HP –	ASTM A572 GR 50
PIPE –	ASTM A53 GR B
STAINLESS STEEL –	ASTM A276 TYPE 316
W –	ASTM A992, ASTM A709

PILING: STEEL – API 5L X52, OR ASTM A252 GR 3, OR ASTM A709 GR 50 FABRICATED TO API 2B

GRATING: STEEL WELDED-BAR TYPE, SERRATED TOP, THICKNESS & BAR SPACINGS AS NOTED ON PLANS.

STEEL 10-DIAMOND GRIP STRUT PLANK, OR APPROVED EQUAL.

PLASTIC: ULTRA HIGH MOLECULAR WEIGHT POLYETHYLENE PLASTIC ASTM D4020

FASTENERS: PER SPECS

CONCRETE: CLASS A

REBAR: LADDER RUNGS – ASTM A706 GR 60
REINFORCEMENT – ASTM A615 GR 60

PROTECTIVE COATINGS
ALL STEEL, PILING, & WELDMENTS: GALVANIZED AFTER FABRICATION PER SPECS, UNLESS OTHERWISE NOTED

FIELD REPAIR OF EXISTING COATINGS: DAMAGED GALVANIZED AND PAINT COATINGS SHALL BE REPAIRED PER SPEC 504-3.03.

PILING
DIAMETER & WALL THICKNESS AS PER PILING TABLE & PLANS
DRIVING SHOES REQUIRED ON ALL PILES, APF 14001 OR EQUAL

WELDS
ALL WELDING SHALL BE PERFORMED BY CERTIFIED PERSONS IN ACCORDANCE WITH AWS D1.1 AND D1.5 AS APPLICABLE.

DESIGN DRAWINGS IDENTIFY THE MAIN LOAD CARRYING MEMBERS. ALL STRUCTURAL STEEL SO DESIGNATED ON THE PLANS SHALL RECEIVE CHARPY V-NOTCH TESTING FOR TEMPERATURE ZONE 2 IN ACCORDANCE WITH ASTM A709 AS NOTED BELOW:

1. TENSION COMPONENTS OF REDUNDANT MEMBERS, DESIGNATED "T" ON THE PLANS, SHALL BE TESTED IN ACCORDANCE WITH TABLE 8.

2. TENSION COMPONENTS OF FRACTURE CRITICAL MEMBERS, DESIGNATED "F" ON THE PLANS, SHALL BE TESTED IN ACCORDANCE WITH TABLE 9.

Project As Built Drawings have been reviewed by me Project Engineer. To the best of his/her knowledge, they represent the project as constructed.

Proj. Eng _____ Date 5/21/17

REFERENCE LEGEND

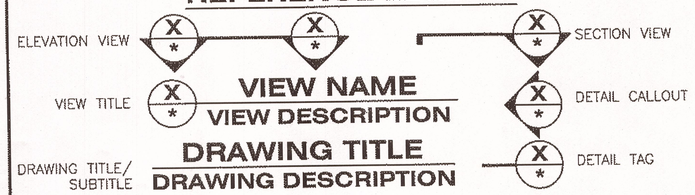

NOTES:
* SHEET NUMBER WHERE REFERENCE IS LOCATED WHEN ON A DIFFERENT SHEET OR DASH MARK WHEN REFERENCE IS ON THE SAME SHEET

DO NOT SCALE FROM THESE DRAWINGS USE DIMENSIONS

DESIGNED BY: T. DOGGETT
CHECKED BY: K. MILLER
DRAWN BY: STAFF

STATE OF ALASKA
49th
Timothy H Doggett
CE-9027
PROFESSIONAL ENGINEER
10/02/2012

STATE OF ALASKA
DEPARTMENT OF TRANSPORTATION & PUBLIC FACILITIES
SOUTHEAST REGION

WRANGELL FERRY TERMINAL IMPROVEMENTS

ESTIMATE OF QUANTITIES & GENERAL NOTES

PATH: Q:\WRG\69432\PLANSET\WF\2_GENERAL NOTES_V1.DWG
TAB: 2 Tuesday, October 02, 2012 2:24:04 PM

REVISIONS NO.	DATE	DESCRIPTION

PROJECT DESIGNATION	YEAR	SHEET NO.	TOTAL SHEETS
69432 SHAK-MGE-STP-0943(25)	2012	2	21

CONSTRUCTION LIMITATIONS AND SEQUENCING NOTES:

1. CONSTRUCTION PHASING PLAN – PRIOR TO STARTING ANY FIELD WORK, THE CONTRACTOR SHALL PROVIDE A DETAILED CONSTRUCTION PHASING PLAN. THE PHASING PLAN SHALL DESCRIBE THE SEQUENCE AND METHODS FOR REMOVAL AND INSTALLATION OF NEW MOORING STRUCTURES. NO WORK MAY COMMENCE ON SITE UNTIL THE CONSTRUCTION PHASING PLAN HAS BEEN APPROVED BY THE ENGINEER.

2. WORK TIMES – ALL WORK SHALL BE SEQUENCED TO MAINTAIN SAFE USE OF THE FACILITIES BY SCHEDULED FERRY VESSELS. COORDINATE WITH AMHS FOR THE LATEST FERRY SCHEDULES AND UPDATES WHEN SCHEDULING CONSTRUCTION ACTIVITIES.

3. UNAUTHORIZED TERMINAL CLOSURES – FOR EACH OCCURRENCE THAT A SCHEDULED AMHS VESSEL IS PREVENTED FROM USING THE FACILITY AS A RESULT OF THE CONTRACTOR'S OPERATIONS, A TERMINAL CLOSURE PRICE WITHHOLDING (DEDUCTION IN CONTRACT PAYMENTS) WILL BE ASSESSED UNDER BID ITEM 202(13).

4. CLEAR ACCESS TO BERTH – PRIOR TO SCHEDULED AMHS FERRY ARRIVALS, THE CONTRACTOR'S EQUIPMENT AND MATERIALS SHALL BE MOVED OR STORED IN LOCATIONS THAT WILL NOT AFFECT SAFE VESSEL ACCESS, BERTHING AND VEHICLE AND PEDESTRIAN TRANSFER OPERATIONS.

5. REQUIRED MOORING STRUCTURES – UNLESS OTHERWISE PERMITTED BY THE ENGINEER, THE CONTRACTOR SHALL NOT REMOVE MORE THAN ONE BERTHING OR FENDERING STRUCTURE AT ANY ONE TIME. EXISTING STRUCTURES SHALL NOT BE REMOVED UNTIL NEW STRUCTURES ARE IN PLACE THAT WILL PROVIDE SUITABLE BERTHING OR MOORING FACILITIES FOR THE VESSEL. THE CONTRACTOR SHALL ASSIST THE VESSEL OR THE TERMINAL OPERATIONS PERSONNEL IN ATTACHING AND REMOVING MOORING LINES IF INACCESSIBLE BY SHIP OR SHORE BASED AMHS STAFF.

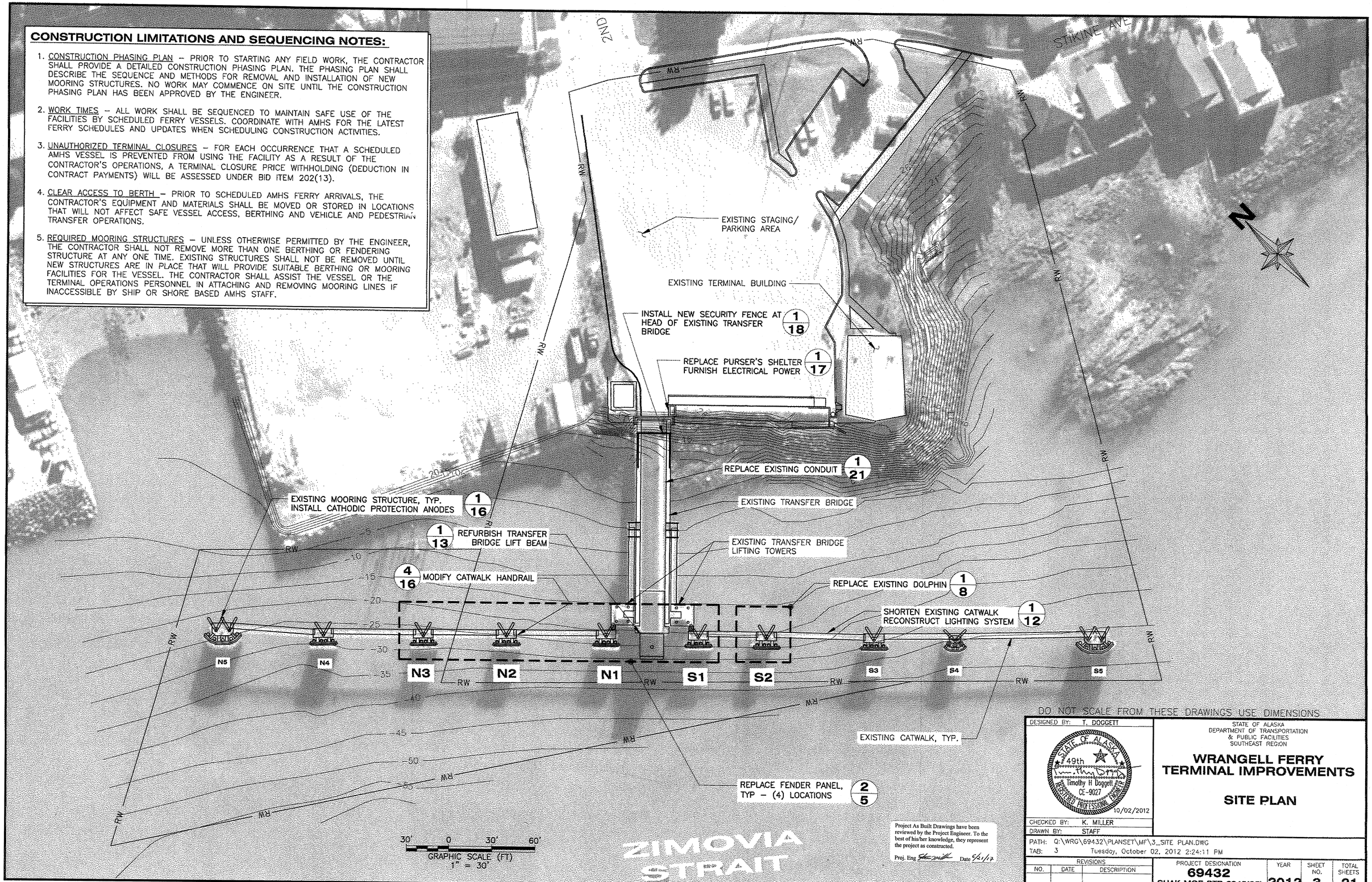

DO NOT SCALE FROM THESE DRAWINGS USE DIMENSIONS

Project As Built Drawings have been reviewed by the Project Engineer. To the best of his/her knowledge, they represent the project as constructed.

Proj. Eng _____ Date 5/1/17

DESIGNED BY: T. DOGGETT	STATE OF ALASKA DEPARTMENT OF TRANSPORTATION & PUBLIC FACILITIES SOUTHEAST REGION
STATE OF ALASKA 49th Timothy H Doggett CE-9027 REGISTERED PROFESSIONAL ENGINEER 10/02/2012	**WRANGELL FERRY TERMINAL IMPROVEMENTS** **SITE PLAN**
CHECKED BY: K. MILLER	
DRAWN BY: STAFF	
PATH: Q:\WRG\69432\PLANSET\MF\3_SITE PLAN.DWG	
TAB: 3 Tuesday, October 02, 2012 2:24:11 PM	

REVISIONS NO.	DATE	DESCRIPTION	PROJECT DESIGNATION	YEAR	SHEET NO.	TOTAL SHEETS
			69432 SHAK-MGE-STP-0943(25)	2012	3	21

BASIS OF CONTROL FOR LOCATION OF DOLPHIN S2:

HORIZONTAL CONTROL – MATCH FENDER FACE TO EXISTING FENDER LINE

VERTICAL CONTROL – DOLPHIN S1 TOP OF DECK, CENTER OF SEAWARD FACE = +31.20 FT (ASSUMED)

BASIS OF CONTROL FOR FENDER PANEL REPLACEMENT:

HORIZONTAL CONTROL – OFFSET FENDER PILES FROM EXISTING DOLPHIN CAP

VERTICAL CONTROL – MATCH ℄ TOP WALE TO ℄ DOLPHIN CAP TOP OF DECK = +31.22 (ASSUMED)

PILE DATA TABLE

LOCATION	QTY	DIM	LOCK-OFF LOAD	ROCK SOCKET	ULTIMATE RESISTANCE		ELEVATION			TOTAL EST. LENGTH	
					UPLIFT	BEARING	CUTOFF	O.G.	EST. TIP	PP24x0.75	PP18x0.5
	(EA)	(DIAM. X WALL)	(KIPS)	(EA)	(KIPS)	(KIPS)	(FT)	(FT)	(FT)	(FT)	(FT)
STRUCTURE N3											
FENDER	2	PP24x0.75	–	2	–	100	+19.16	–23.9	–41.0	120	
STRUCTURE N2											
FENDER	2	PP24x0.75	–	2	–	100	+19.16	–24.9	–41.0	120	
STRUCTURE N1											
FENDER	2	PP24x0.75	–	2	–	100	+19.16	–23.7	–38.0	115	
STRUCTURE S1											
FENDER	2	PP24x0.75	–	2	–	100	+19.16	–24.9	–41.0	120	
STRUCTURE S2											
FENDER	2	PP24x0.75	–	2	–	100	+19.16	–30.3	–54.0	147	
VERTICAL	1	PP18x0.50	240	–	400	400	+26.22	–30.0	–49.0		75
3:1 BATTER	2	PP18x0.50	120	–	200	250	+31.22	–30.0	–49.0		170
									TOTAL =	622	245

STRUCTURE S2: INSTALL PILE TENSION ANCHORS IN VERTICAL AND BATTER PILES.
ALL FENDER PILES: INSTALL IN 5 FT DEEP ROCK SOCKET.

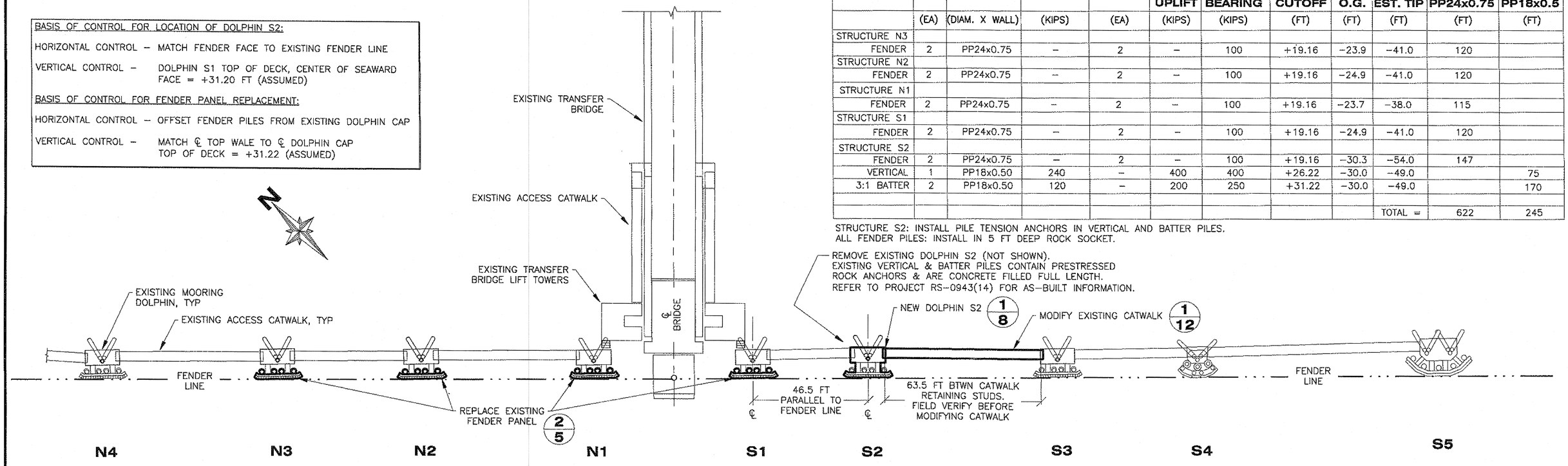

PLAN

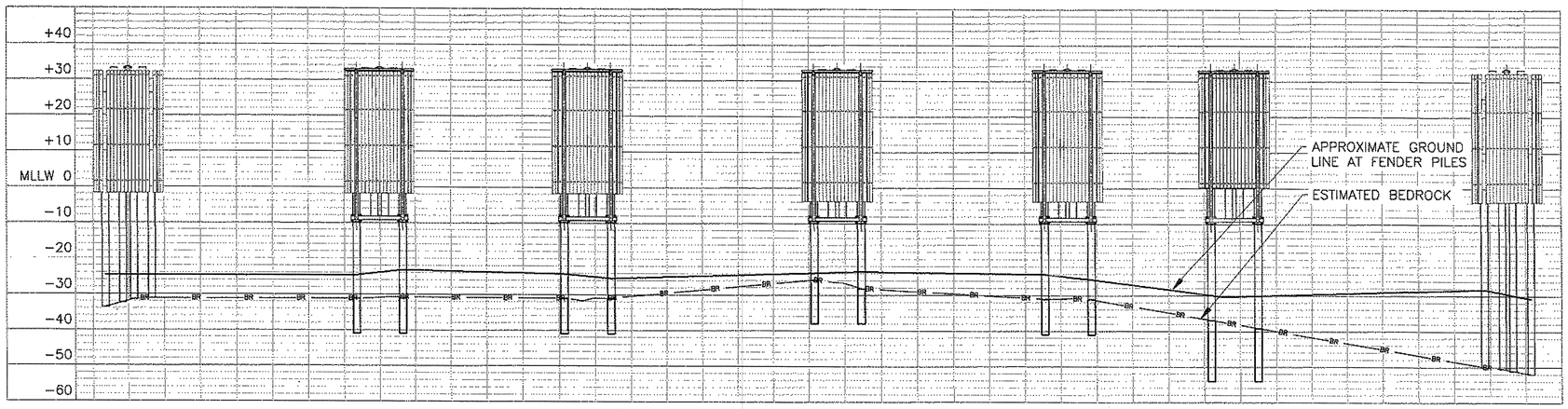

GROUND PROFILE
LOOKING SHOREWARD

NOTES:

1. ESTIMATED GROUND AND BEDROCK ELEVATIONS ARE BASED ON PILE DRIVING LOGS OF PREVIOUS DOLPHIN CONSTRUCTION PROJECTS AND ARE COMPILED HERE FOR INFORMATIONAL PURPOSES ONLY.
2. DRIVE VERTICAL AND BATTER PILES TO REFUSAL IN ROCK AND THEN INSTALL TENSION PILE ANCHOR.
3. DRIVE FENDER PILES INTO DRILLED ROCK SOCKET.
4. OPEN END CUTTING SHOE REQUIRED ON ALL PILES, API 0-14001 OR APPROVED EQUAL.
5. DOLPHINS N2 & N3 WERE CONSTRUCTED UNDER PROJECT #75279. DOLPHINS N1 & S1 WERE CONSTRUCTED UNDER PROJECT #F-095-3(1). COPIES OF THESE DRAWINGS ARE AVAILABLE FROM THE DEPARTMENT.

DO NOT SCALE FROM THESE DRAWINGS USE DIMENSIONS

Project As Built Drawings have been reviewed by the Project Engineer. To the best of his/her knowledge, they represent the project as constructed.

Proj. Eng. _____ Date 6/1/17

DESIGNED BY: T. DOGGETT

STATE OF ALASKA – 49th – Timothy H Doggett – CE-9027 – REGISTERED PROFESSIONAL ENGINEER – 10/02/2012

CHECKED BY: K. MILLER

DRAWN BY: STAFF

PATH: Q:\WRG\69432\PLANSET\MF\4_ DOLPHIN PLAN PROFILE PILE DATA TABLE.DWG

TAB: 4 Tuesday, October 02, 2012 2:24:22 PM

STATE OF ALASKA
DEPARTMENT OF TRANSPORTATION & PUBLIC FACILITIES
SOUTHEAST REGION

WRANGELL FERRY TERMINAL IMPROVEMENTS

DOLPHIN PLAN AND PROFILE PILE DATA TABLE

REVISIONS NO.	DATE	DESCRIPTION

PROJECT DESIGNATION	YEAR	SHEET NO.	TOTAL SHEETS
69432 SHAK-MGE-STP-0943(25)	2012	4	21

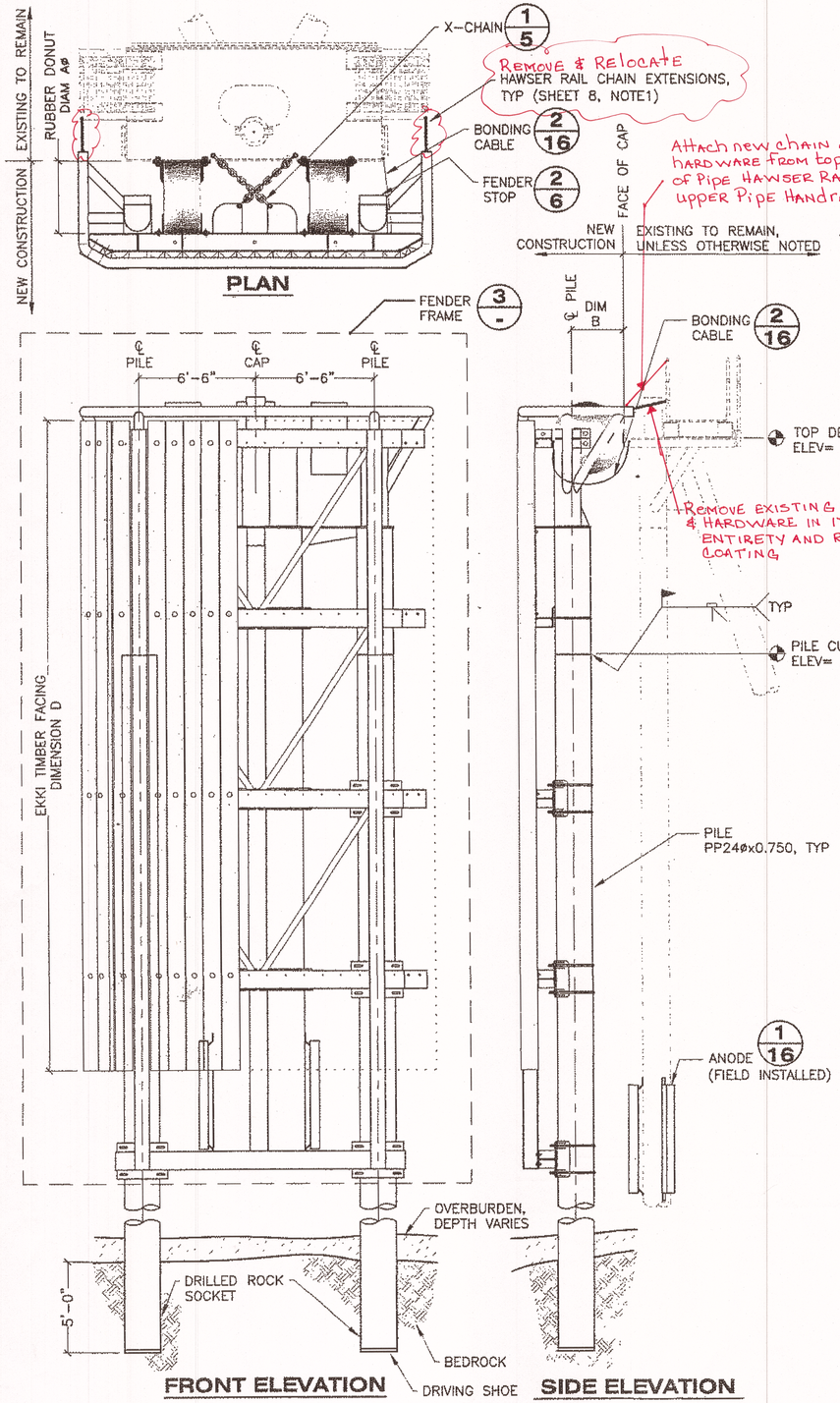

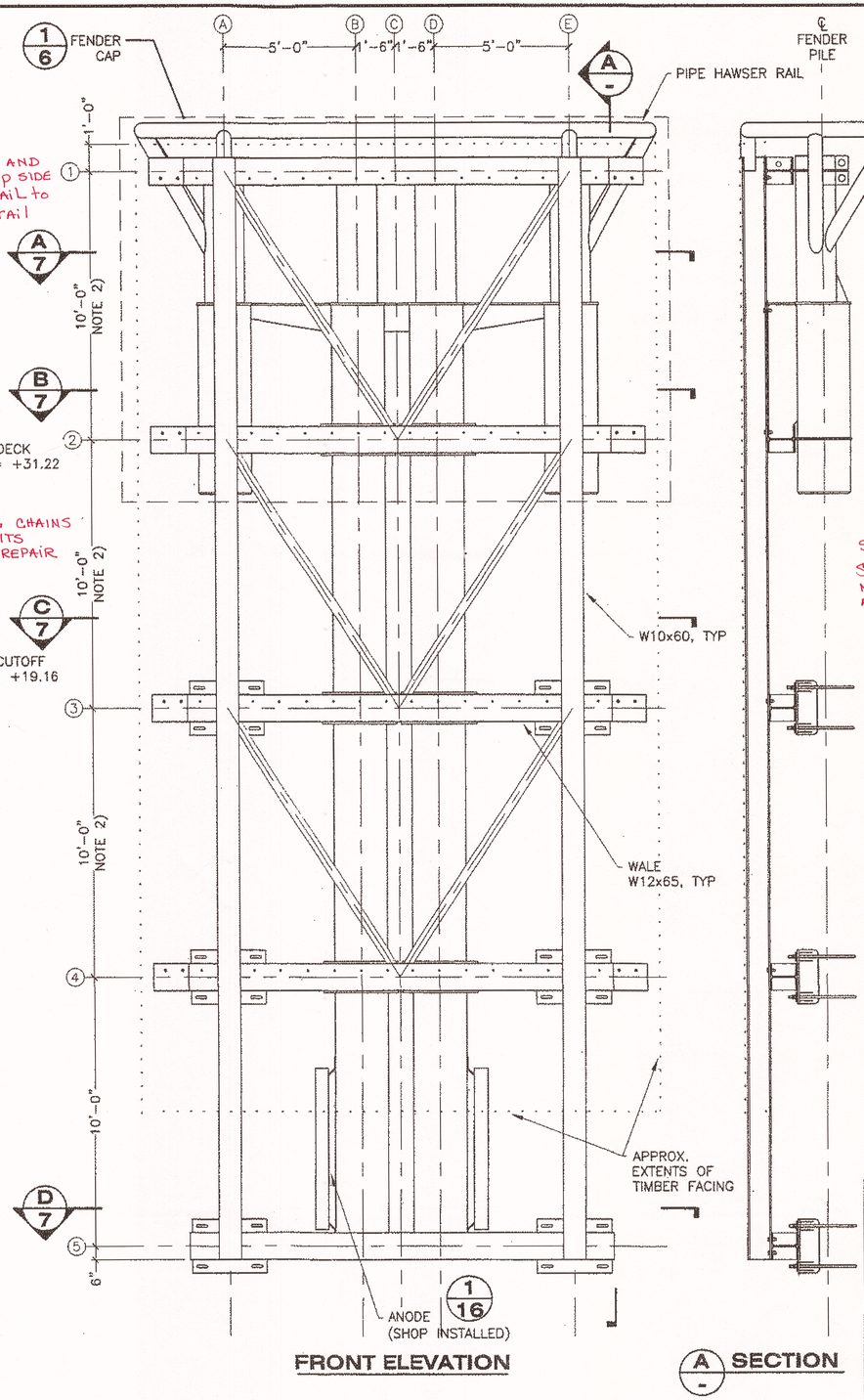

NOTES:

1. REMOVE EKKI TIMBERS FROM EXISTING FENDER PANELS AND RE-INSTALL TO NEW PANELS USING 1"ø ECON HEAD BOLT, WASHER, AND NUT. DISPOSE OF EXISTING STEEL FENDER CROWN AND REMOVE LAG SCREWS OR GRIND FLUSH WITH FACE OF TIMBER.
2. THE EXISTING FENDER PANELS WERE ASSEMBLED ON SITE AND WALE SPACING MAY VARY FROM THAT SHOWN ON THE RECORD DRAWINGS. CONTRACTOR SHALL MEASURE WALE SPACING OF PANELS S1, N1, N2, & N3 IN THE FIELD AND FABRICATE NEW PANELS TO MATCH IN ORDER TO AVOID RE-DRILLING OR REAMING BOLT HOLES IN SALVAGED TIMBERS.
3. SALVAGE AND REUSE EXISTING RUBBER DONUT FENDERS OF DOLPHINS S1, N1, N2, & N3, FURNISH NEW RUBBER DONUTS FOR DOLPHIN S2.
4. LOWER WALES ARE CLAMPED TO DRIVEN PILES. UNDERWATER DIVING IS REQUIRED TO ASSEMBLE AND COMPLETE JOINTS OF LOWEST WALES. CONTRACTOR SHALL FURNISH STILL PHOTOGRAPH OF EVERY COMPLETED JOINT FOR QUALITY ASSURANCE, CLEARLY IDENTIFYING JOINT IN THE PHOTOGRAPH.

Match chain from top pipe of catwalk hand rail to top of Hawser Rail. No Shackle @ Hawser End

S1, S2, N1, N2, N3.
Slight slack in chain, but MAINTAIN NEGATIVE slope AWAY from pile hand rail

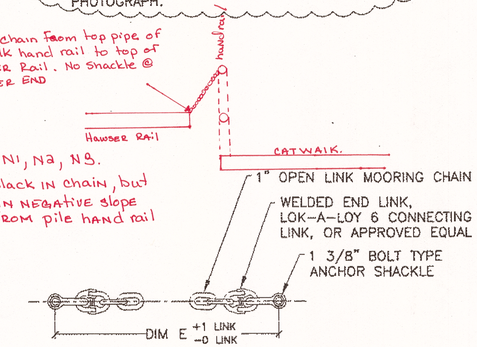

1/5 DETAIL X-CHAIN

(2) SETS OF CHAIN ASSEMBLIES REQ'D PER DOLPHIN

TABLE 1 – FENDER PANEL DIMENSIONS

DOLPHIN	RUBBER DONUT O.D. AØ	DIMENSION B	DIMENSION C	DIMENSION D	DIMENSION E	FENDER STOP SPACER REQ'D
S2	48" *	2'-10 3/4"	1'-1"	34'	4'-2"	YES
S1	40"	2'-2 3/4"	11"	36'	3'-9"	NO
N1	40"	2'-2 3/4"	11"	36'	3'-9"	NO
N2	48"	2'-10 3/4"	1'-1"	34'	4'-2"	YES
N3	48"	2'-10 3/4"	1'-1"	34'	4'-2"	YES

* DISPOSE OF RUBBER DONUT FENDERS OF EXISTING DOLPHIN S2 AND REPLACE WITH NEW FENDERS.

DO NOT SCALE FROM THESE DRAWINGS USE DIMENSIONS

DESIGNED BY: T. DOGGETT
CHECKED BY: K. MILLER
DRAWN BY: STAFF
PATH: Q:\WRG\69432\PLANSET\MF\5-7_PLAN ELEVATION FENDER SYSTEM N3-S1_R01.DWG
TAB: 5 Thursday, October 25, 2012 11:07:13 AM

STATE OF ALASKA
DEPARTMENT OF TRANSPORTATION & PUBLIC FACILITIES
SOUTHEAST REGION

STATE OF ALASKA 49th Timothy H Doggett CE-9027 REGISTERED PROFESSIONAL ENGINEER 10/25/2012

WRANGELL FERRY TERMINAL IMPROVEMENTS

FENDER PANELS DOLPHINS S1, S2, N1, N2, N3

REVISIONS NO.	DATE	DESCRIPTION
1	10/25/12	TIMBER BOLT SPACING

PROJECT DESIGNATION	YEAR	SHEET NO.	TOTAL SHEETS
69432 SHAK-MGE-STP-0943(25)	2012	5	21

Project As Built Drawings have been reviewed by the Project Engineer. To the best of his/her knowledge, they represent the project as constructed.

Proj. Eng [signature] Date 6/21/17

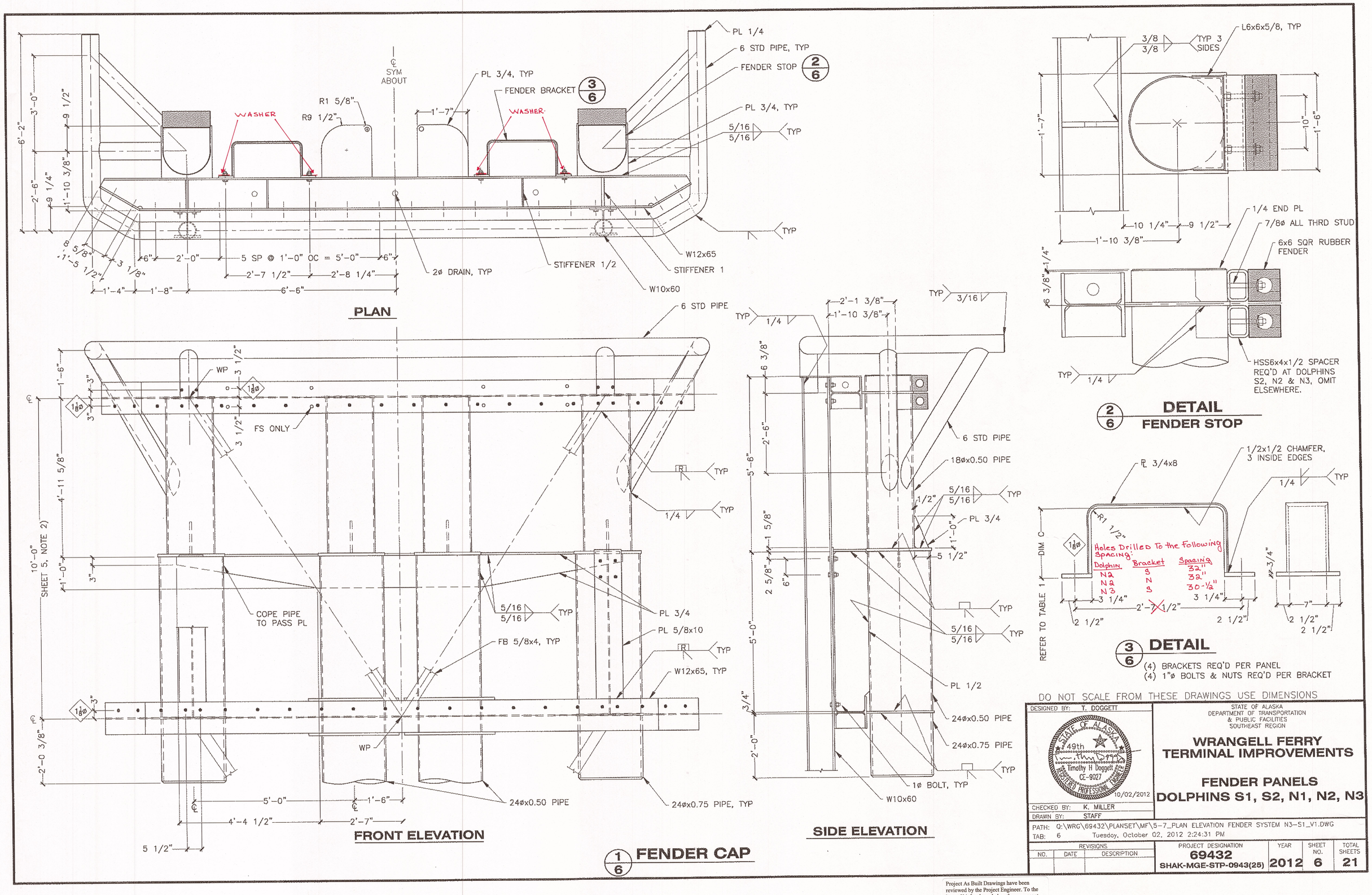

Project As Built Drawings have been reviewed by the Project Engineer. To the best of his/her knowledge, they represent the project as constructed.

Proj. Eng [signature] Date 6/21/17

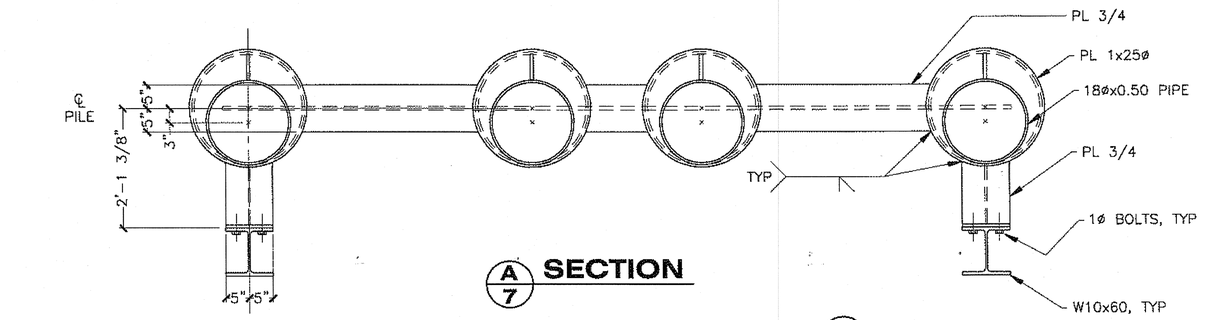

A/7 SECTION

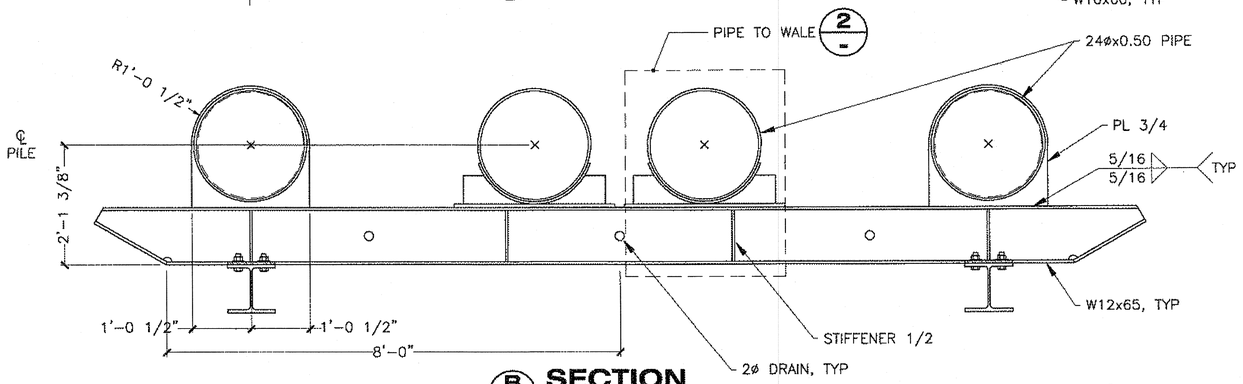

B/7 SECTION

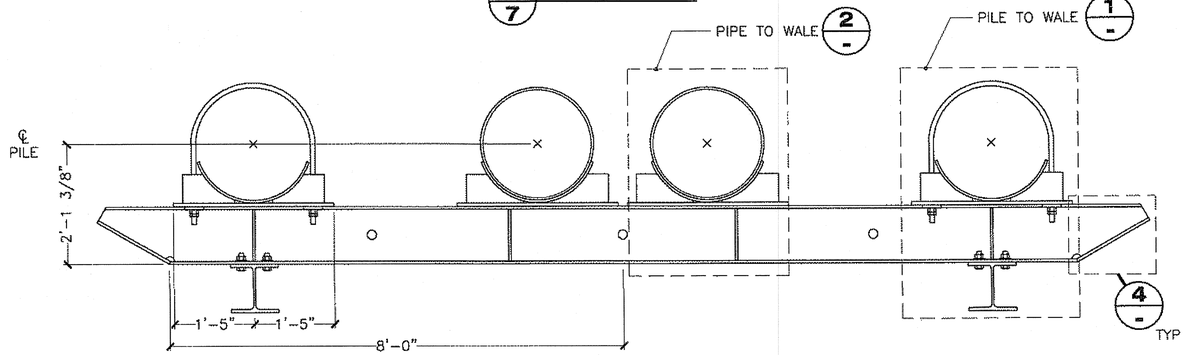

C/7 SECTION

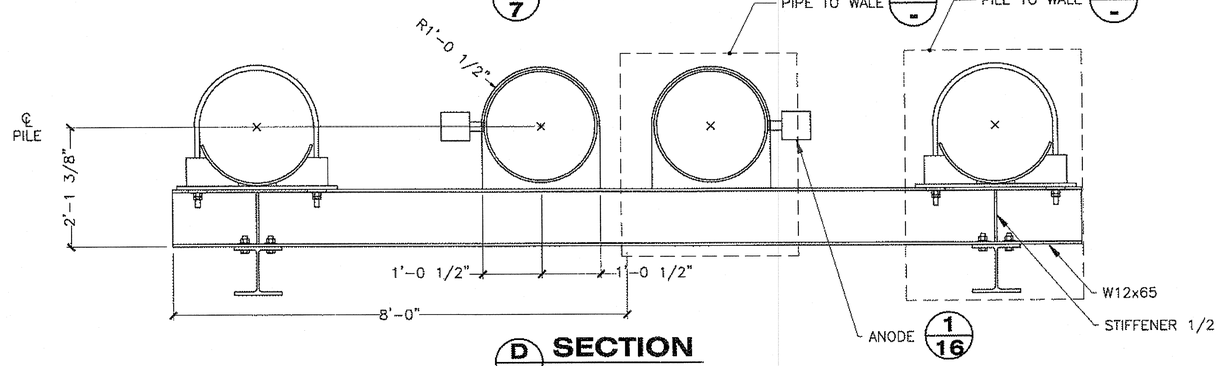

D/7 SECTION

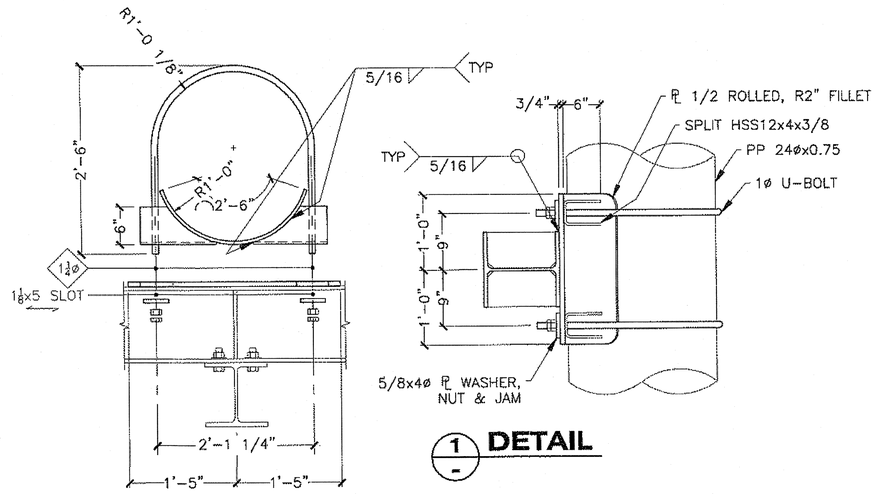

1/- DETAIL

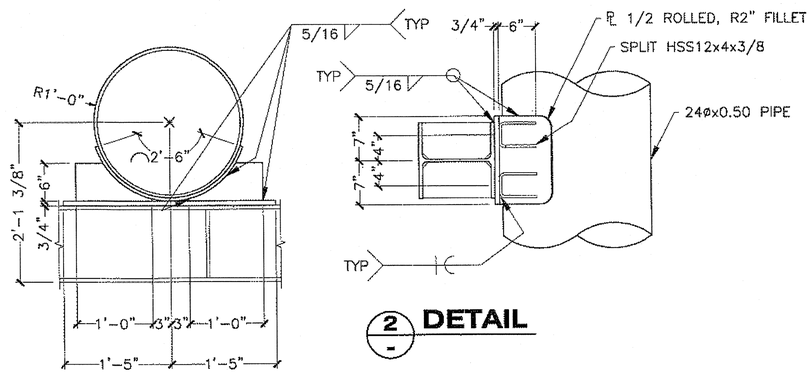

2/- DETAIL

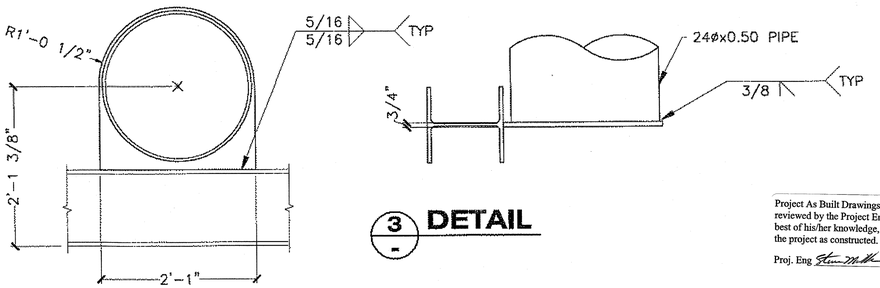

3/- DETAIL

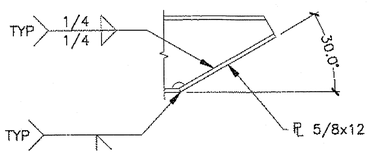

4/- DETAIL

Project As Built Drawings have been reviewed by the Project Engineer. To the best of his/her knowledge, they represent the project as constructed.

Proj. Eng Steve Miller Date 6/21/17

DO NOT SCALE FROM THESE DRAWINGS USE DIMENSIONS

DESIGNED BY: T. DOGGETT

STATE OF ALASKA
DEPARTMENT OF TRANSPORTATION
& PUBLIC FACILITIES
SOUTHEAST REGION

STATE OF ALASKA 49th Timothy H Doggett CE-9027 REGISTERED PROFESSIONAL ENGINEER 10/02/2012

CHECKED BY: K. MILLER

DRAWN BY: STAFF

PATH: Q:\WRG\69432\PLANSET\MF\5-7_PLAN ELEVATION FENDER SYSTEM N3-S1_V1.DWG

TAB: 7 Tuesday, October 02, 2012 2:24:32 PM

WRANGELL FERRY TERMINAL IMPROVEMENTS

FENDER PANELS DOLPHINS S1, S2, N1, N2, N3

REVISIONS		
NO.	DATE	DESCRIPTION

PROJECT DESIGNATION	YEAR	SHEET NO.	TOTAL SHEETS
69432 SHAK-MGE-STP-0943(25)	2012	7	21

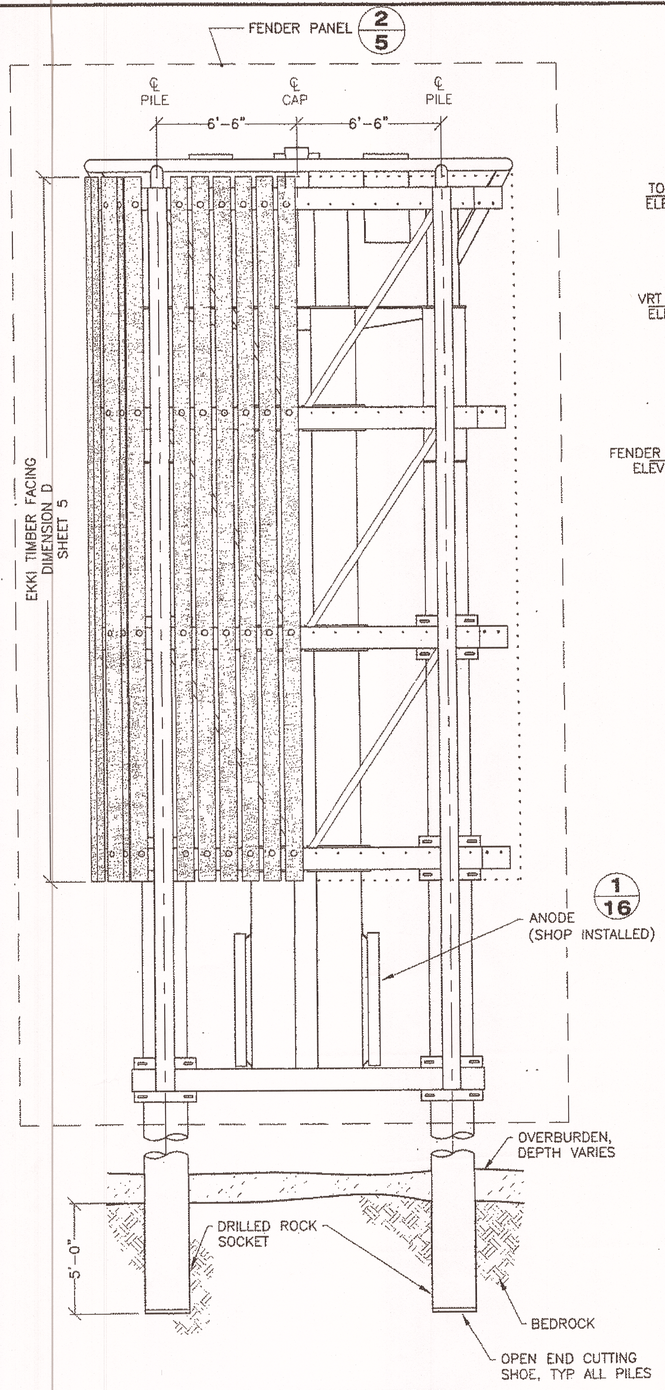

FRONT ELEVATION

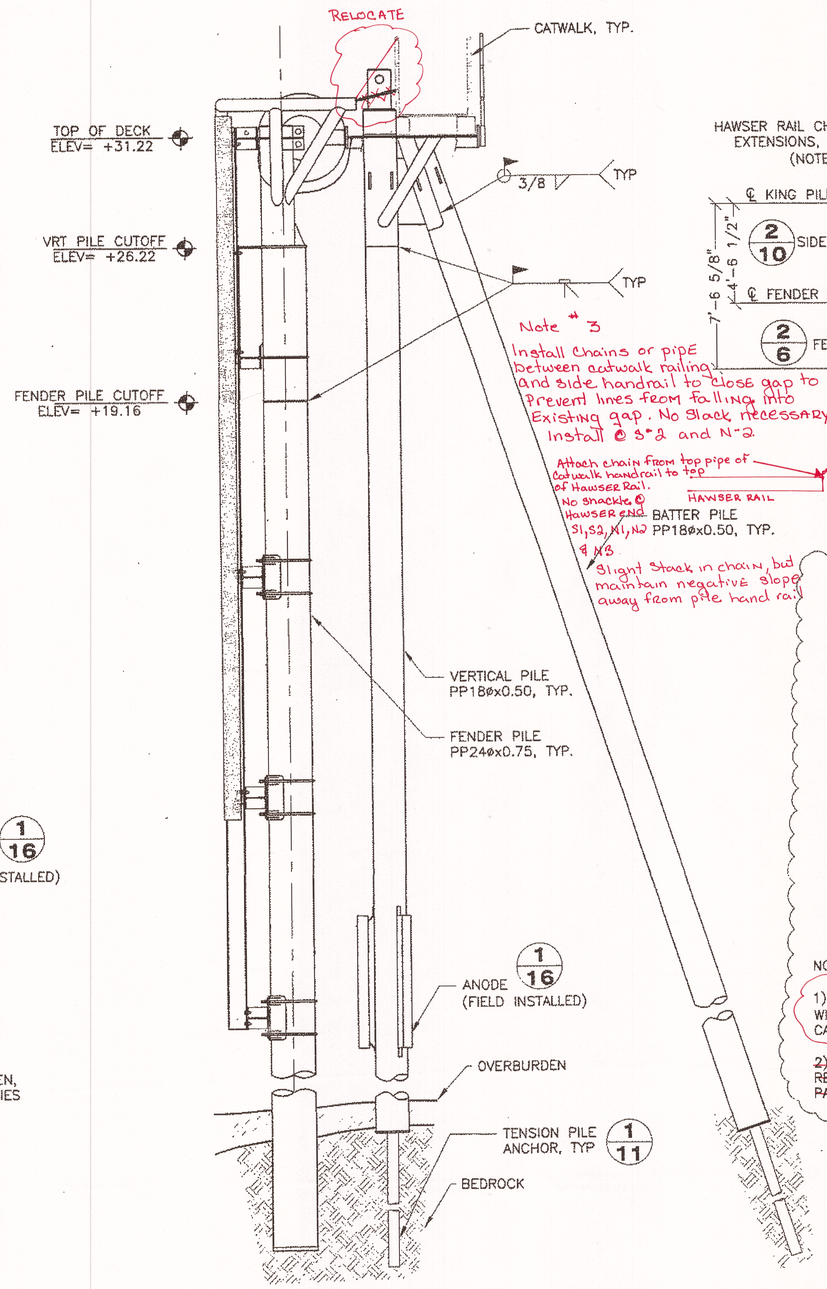

SIDE ELEVATION

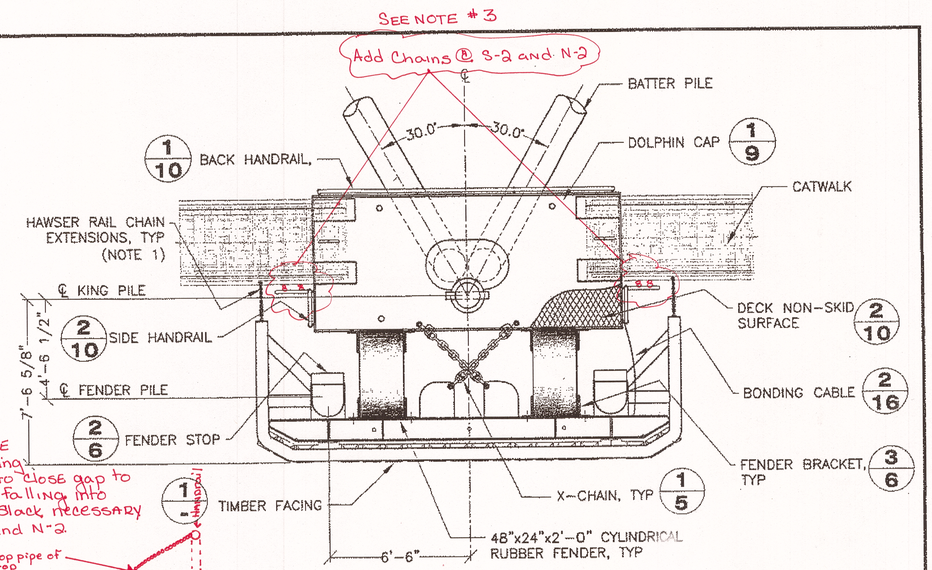

PLAN

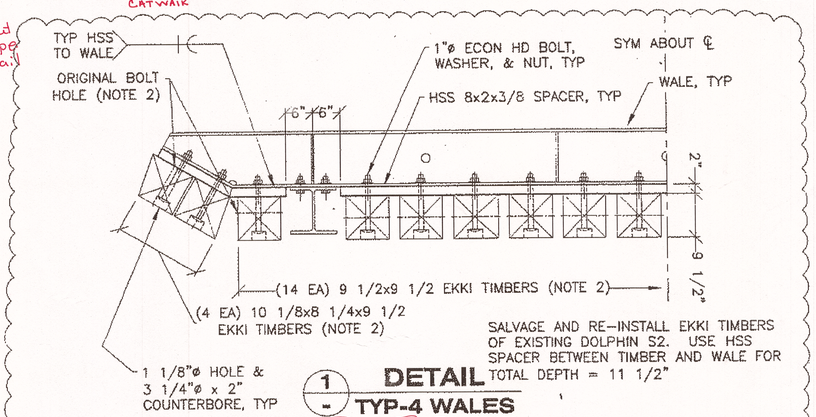

1/- DETAIL TYP-4 WALES

SALVAGE AND RE-INSTALL EKKI TIMBERS OF EXISTING DOLPHIN S2. USE HSS SPACER BETWEEN TIMBER AND WALE FOR TOTAL DEPTH = 11 1/2"

NOTES:

1) WELD CHAIN LINKS TO THE TOP HAWSER RAIL & upper CATWALK RAILING, CONNECT TO GALV. 3/16" GR.30 CHAIN WITH 3/16" SHACKLES, ~~EACH END~~; COVER WITH 3/4" VINYL TUBING, TYP. LEAVE ~~ENOUGH~~ Little SLACK FOR CATWALK MOVEMENT. & handrail end only

2) ~~BOLT SPACING OF TIMBERS ON EXISTING DOLPHIN S2 AND NEW FENDER PANEL DO NOT MATCH. RE-DRILL AND COUNTERBORE ALL BOLT HOLES TO MATCH NEW WALES. PLACE 14 TIMBERS ON FACE OF PANEL WITH ORIGINAL BOLT HOLES PARALLEL TO WALE, OTHERS TO BE PERPENDICULAR TO WALE.~~

1/8 NEW DOLPHIN

DO NOT SCALE FROM THESE DRAWINGS USE DIMENSIONS

Project As Built Drawings have been reviewed by the Project Engineer. To the best of his/her knowledge, they represent the project as constructed.

Proj. Eng Steve Mark Date 6/21/17

DESIGNED BY: T. DOGGETT
CHECKED BY: K. MILLER
DRAWN BY: STAFF

STATE OF ALASKA 49th Timothy H Doggett CE-9027 REGISTERED PROFESSIONAL ENGINEER 10/25/2012

PATH: O:\WRG\69432\PLANSET\MF\8_PLAN ELEVATION S2_R01.DWG
TAB: 8 Thursday, October 25, 2012 12:19:56 PM

REVISIONS NO.	DATE	DESCRIPTION
1	10/25/12	TIMBER BOLT SPACING

STATE OF ALASKA
DEPARTMENT OF TRANSPORTATION & PUBLIC FACILITIES
SOUTHEAST REGION

WRANGELL FERRY TERMINAL IMPROVEMENTS

DOLPHIN S2 PLAN & ELEVATION

PROJECT DESIGNATION	YEAR	SHEET NO.	TOTAL SHEETS
69432 SHAK-MGE-STP-0943(25)	2012	8	21

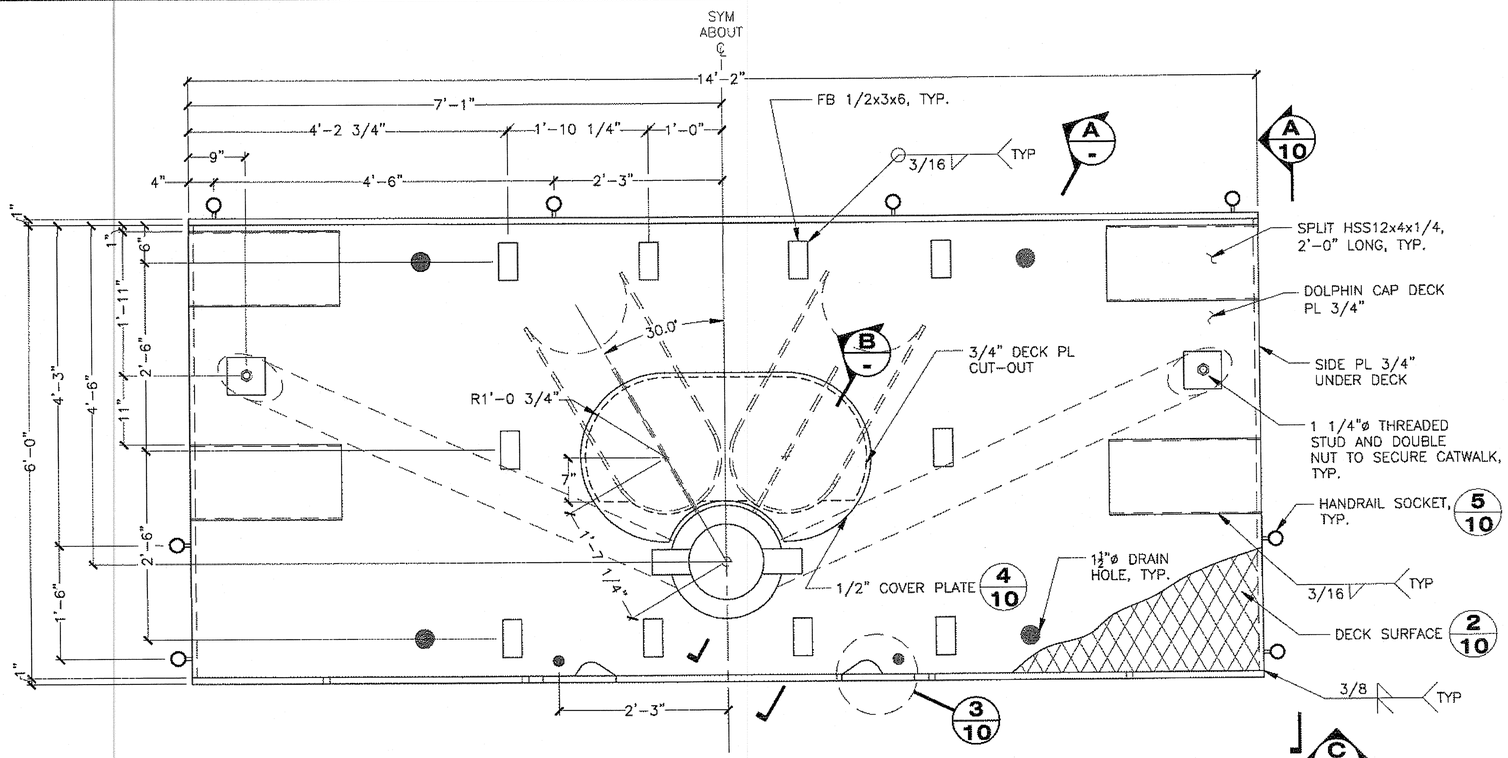

1/9 **PLAN**

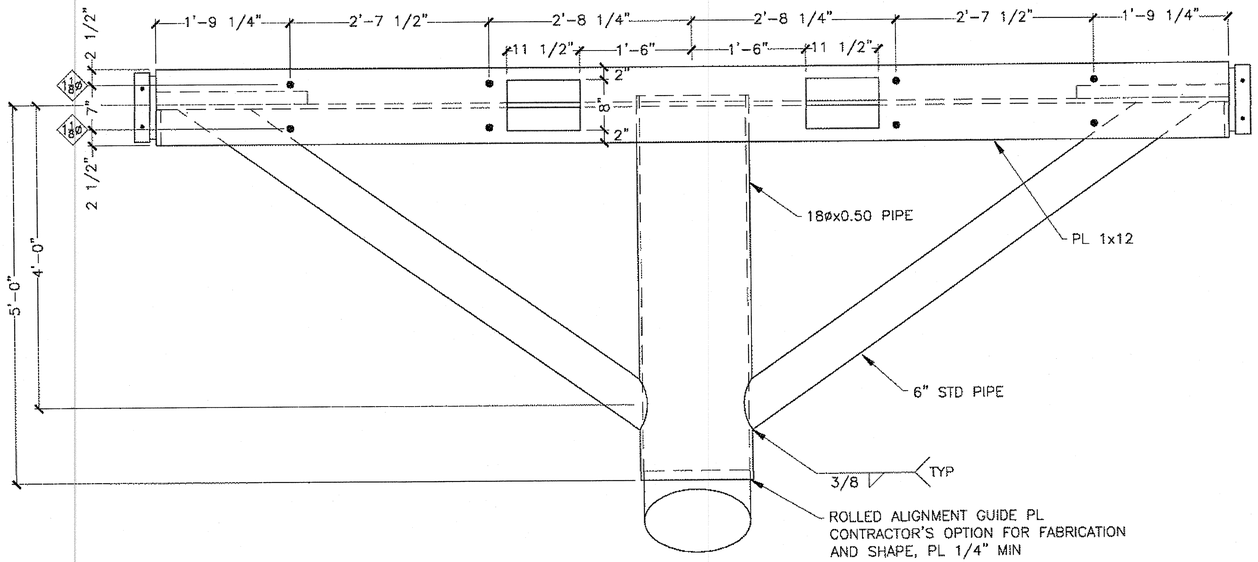

C - **ELEVATION**

NOTE:
TENTION PILE ANCHOR NOT SHOWN FOR CLARITY

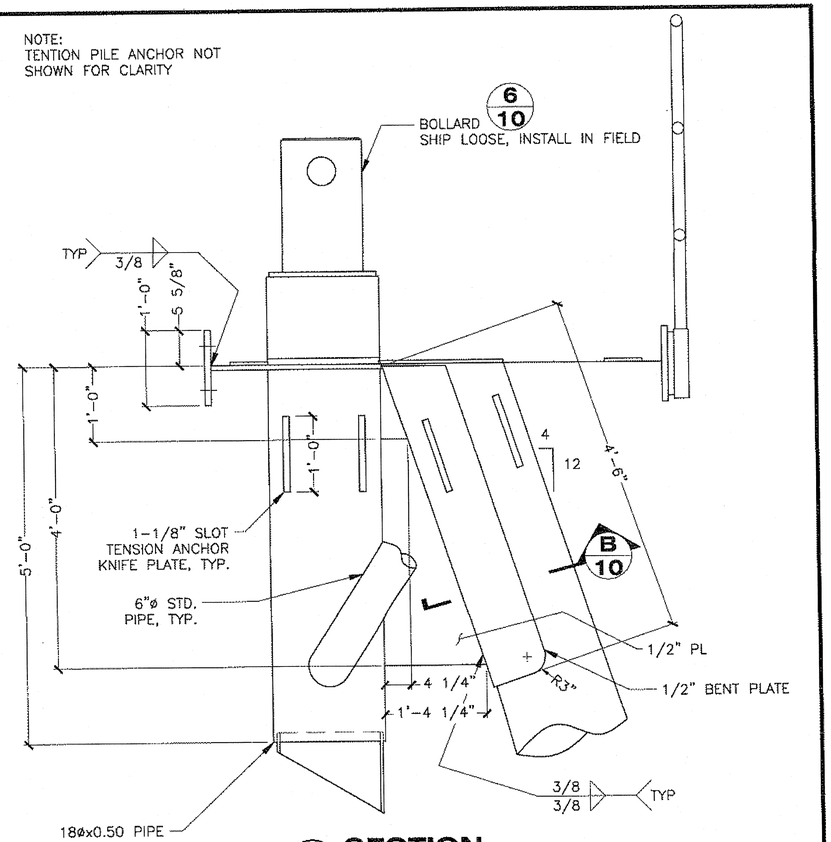

A - **SECTION**

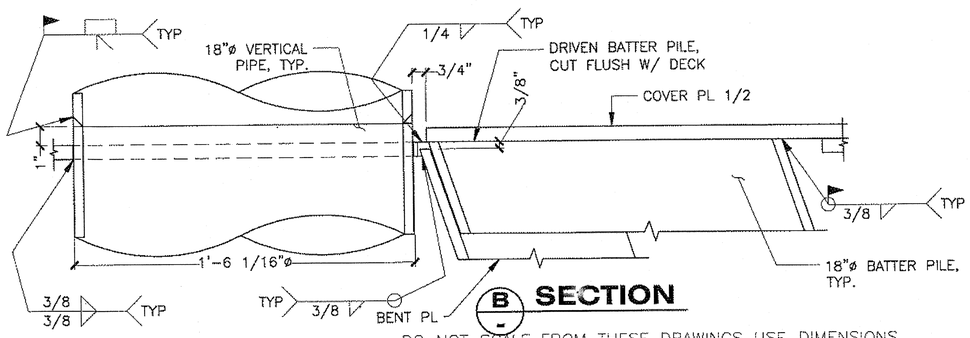

B - **SECTION**

DO NOT SCALE FROM THESE DRAWINGS USE DIMENSIONS

Project As Built Drawings have been reviewed by the Project Engineer. To the best of his/her knowledge, they represent the project as constructed.

Proj. Eng _____ Date 5/1/13

DESIGNED BY: T. DOGGETT

STATE OF ALASKA
Timothy H Doggett
CE-9027
REGISTERED PROFESSIONAL ENGINEER
10/02/2012

CHECKED BY: K. MILLER

DRAWN BY: STAFF

STATE OF ALASKA
DEPARTMENT OF TRANSPORTATION & PUBLIC FACILITIES
SOUTHEAST REGION

WRANGELL FERRY TERMINAL IMPROVEMENTS

DOLPHIN S2 DETAILS

PATH: Q:\WRG\69432\PLANSET\MF\9-10_DOLPHIN CAP DETAILS_V1.DWG
TAB: 9 Tuesday, October 02, 2012 2:24:44 PM

REVISIONS		
NO.	DATE	DESCRIPTION

PROJECT DESIGNATION	YEAR	SHEET NO.	TOTAL SHEETS
69432 SHAK-MGE-STP-0943(25)	2012	9	21

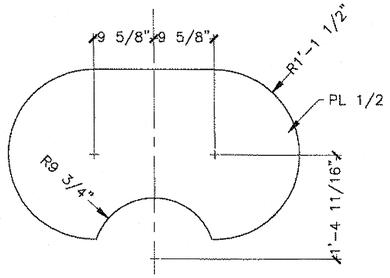

4/10 DETAIL COVER PLATE

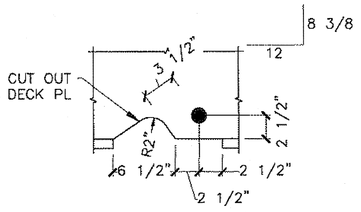

3/10 PLAN

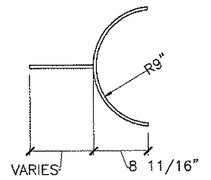

B/10 SECTION

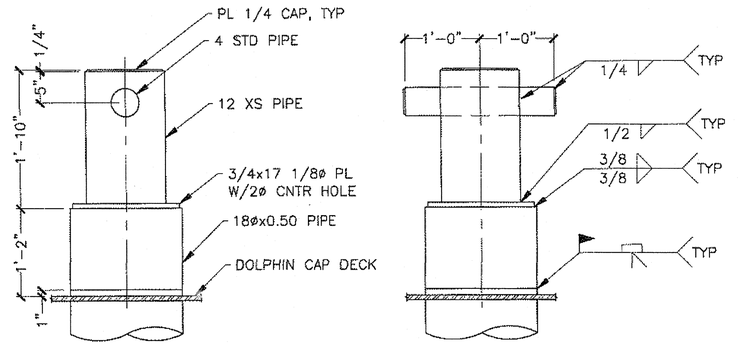

6/10 DETAIL

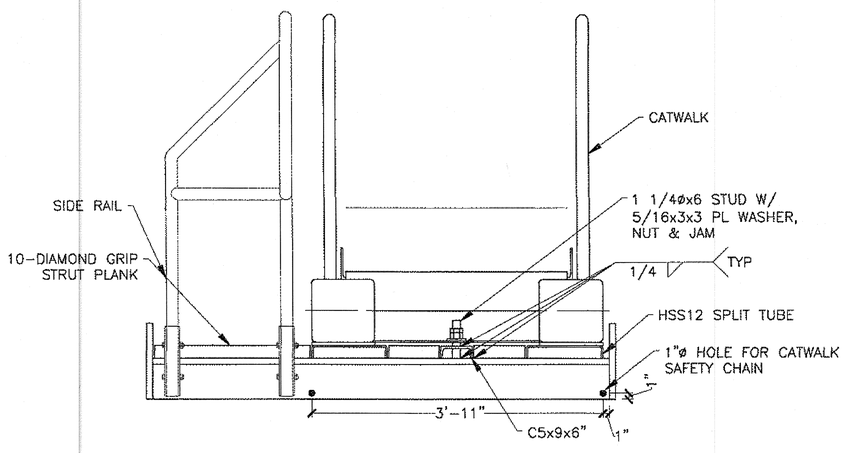

A/10 SECTION

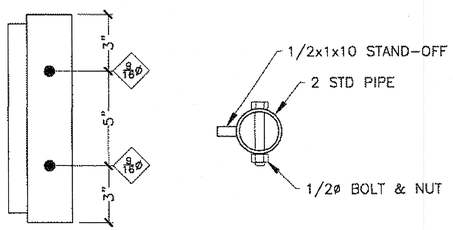

ELEVATION **PLAN**

5/10 DETAIL

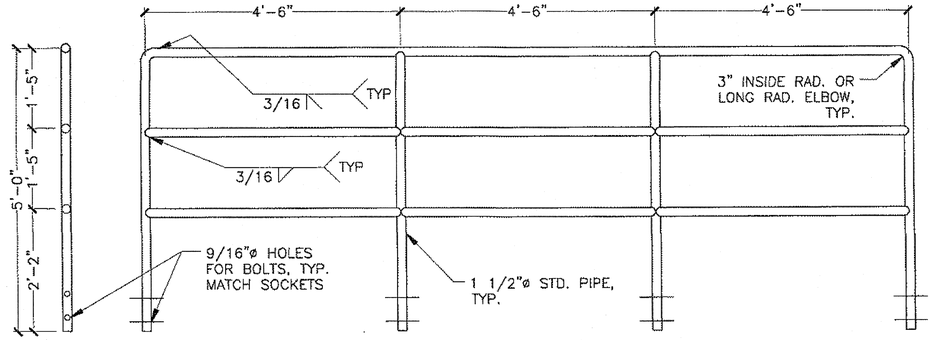

1/10 ELEVATION BACK HANDRAIL

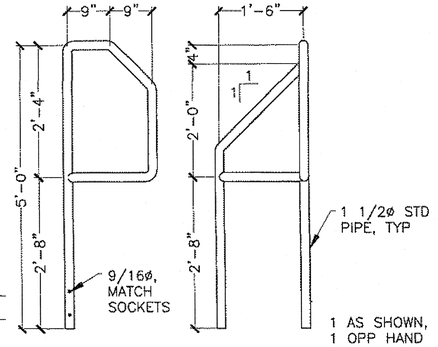

2/10 ELEVATION SIDE HANDRAIL

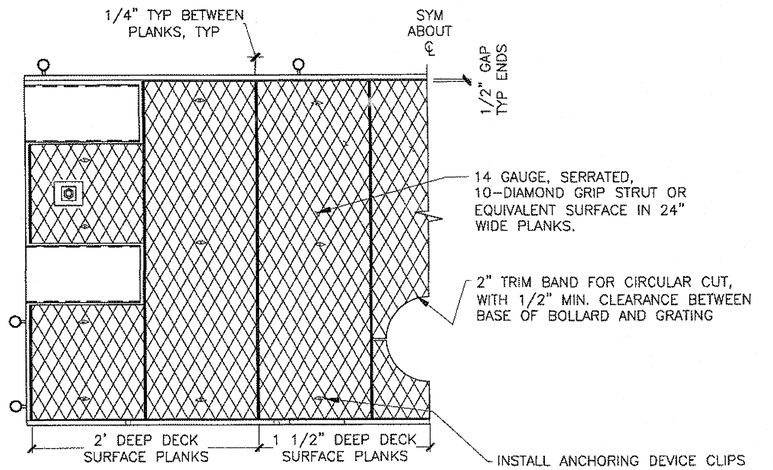

2/10 PLAN

Project As Built Drawings have been reviewed by the Project Engineer. To the best of his/her knowledge, they represent the project as constructed.

Proj. Eng. _____ Date 6/1/17

DO NOT SCALE FROM THESE DRAWINGS USE DIMENSIONS

DESIGNED BY: T. DOGGETT	STATE OF ALASKA DEPARTMENT OF TRANSPORTATION & PUBLIC FACILITIES SOUTHEAST REGION
	WRANGELL FERRY TERMINAL IMPROVEMENTS
	DOLPHIN S2 MISC DETAILS
CHECKED BY: K. MILLER	
DRAWN BY: STAFF	
PATH: Q:\WRG\69432\PLANSET\MF\9-10_DOLPHIN CAP DETAILS_V1.DWG	
TAB: 10 Tuesday, October 02, 2012 2:24:48 PM	

STATE OF ALASKA · 49th · Timothy H. Doggett · CE-9027 · REGISTERED PROFESSIONAL ENGINEER · 10/02/2012

REVISIONS NO.	DATE	DESCRIPTION	PROJECT DESIGNATION	YEAR	SHEET NO.	TOTAL SHEETS
			69432 SHAK-MGE-STP-0943(25)	2012	10	21

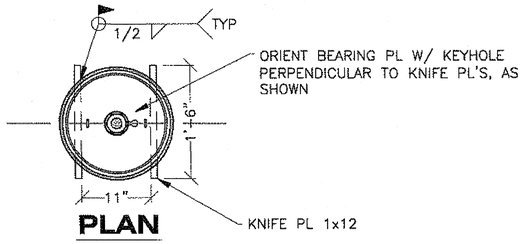

PLAN

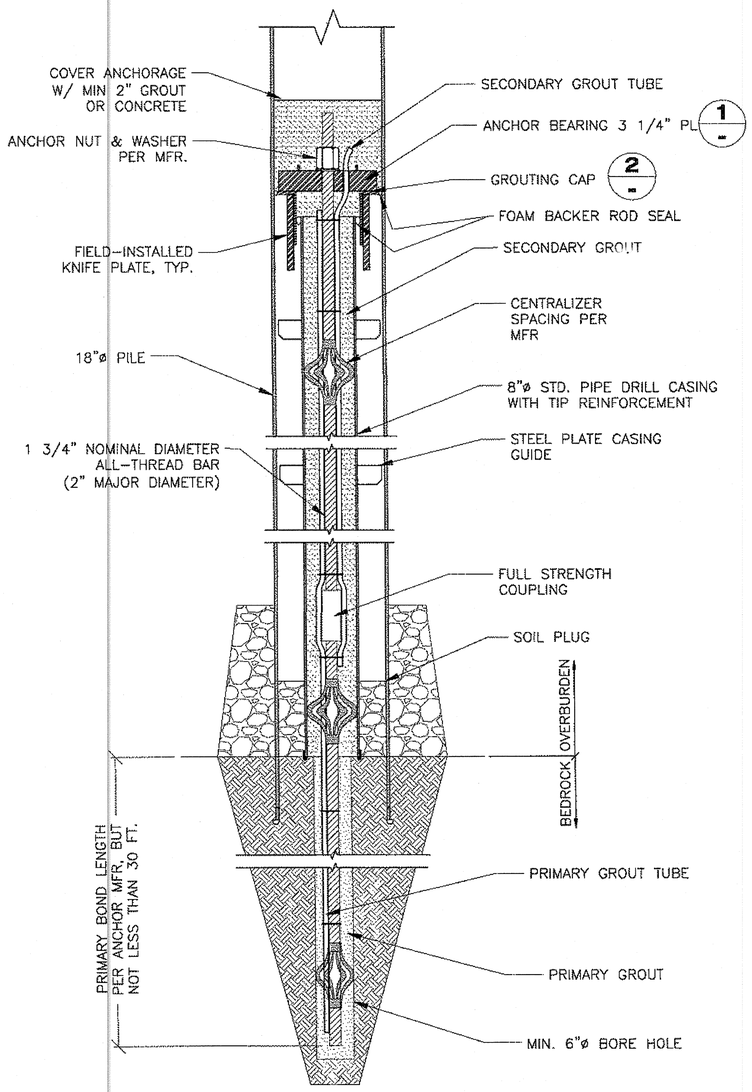

1/11 TENSION PILE ANCHOR

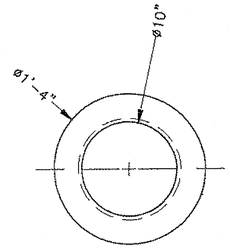

PLAN

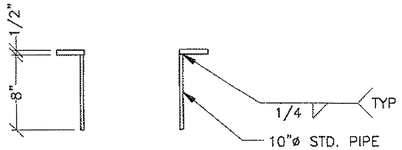

2/- SECTION

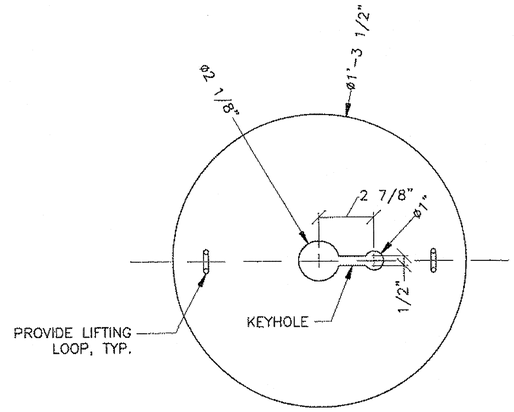

1/- DETAIL

ROCK ANCHOR NOTES

GENERAL

1) REFER TO SECTION 518 OF THE SPECIAL PROVISIONS FOR ADDITIONAL TENSION PILE REQUIREMENTS.

2) ANCHORING DETAILS AND METHODS SHOWN ARE A SUGGESTED PROCEDURE. METHODS OR MATERIALS MAY BE MODIFIED AT THE REQUEST OF THE CONTRACTOR – IF APPROVED BY THE ENGINEER IN ADVANCE OF CONSTRUCTION.

MATERIALS & SPECIFICATIONS

1) ANCHOR RODS SHALL BE ALL-THREAD BAR PER ASTM A-722 & ASTM A-615, GRADE 150 KSI AS MANUFACTURED BY WILLIAMS FORM ENGINEERING CORPORATION OR APPROVED EQUAL. COUPLINGS SHALL BE CAPABLE OF DEVELOPING THE FULL TENSILE STRENGTH OF THE BAR. ANCHOR RODS SHALL BE EQUIPPED WITH POLYETHYLENE CENTRALIZERS TO ENSURE THE ANCHOR ROD IS CENTERED IN THE CASING AND DRILLED HOLE.

2) STEEL ANCHOR BEARING AND KNIFE PLATES SHALL BE ASTM A572, GRADE 50.

3) PRIMARY AND SECONDARY GROUT MIXTURES SHALL BE DESIGNED BY THE CONTRACTOR IN ACCORDANCE WITH RECOMMENDATIONS PROVIDED BY THE ANCHOR ROD SYSTEM MANUFACTURER. SUBMIT GROUT MIXTURE DESIGNS TO THE ENGINEER FOR APPROVAL PRIOR TO START OF WORK. ALTERNATELY CONTRACTOR MAY USE PRE-MIXED, PRE-PACKAGED GROUT.

4) PRIMARY AND SECONDARY GROUT TUBE SYSTEMS SHALL BE DESIGNED BY THE CONTRACTOR IN ACCORDANCE WITH THE ANCHOR ROD MANUFACTURERS RECOMMENDATIONS FOR THE SELECTED GROUT MIXTURE AND GROUT PUMP.

SUGGESTED INSTALLATION PROCEDURE

1) DRIVE PILES TO PRACTICAL REFUSAL AND SEAT ALL PILES INTO COMPETENT BEDROCK. AFFIX CAP TO PILES.

2) DRIVE CASING TO SURFACE OF BEDROCK.

3) DRILL THROUGH CASING AND INTO BEDROCK TO THE APPROVED DEPTH. CLEAN HOLE BY FLUSHING WITH WATER AND AIR.

4) INSTALL KNIFE PLATE SUPPORTS AND GROUTING CAP.

5) PLACE ANCHOR ROD WITH PRIMARY AND SECONDARY GROUT TUBES ATTACHED INTO CASING/DRILLED HOLE.

6) INJECT PRIMARY GROUT FROM THE BOTTOM OF THE HOLE TO THE TOP TO ENSURE COMPLETE COVERAGE. GROUT TUBE SHALL REMAIN FIXED TO THE ANCHOR AND NOT WITHDRAWN DURING GROUTING. MEASURE GROUT VOLUME TO ENSURE ANCHOR IS COVERED FOR THE DESIGN PRIMARY BOND LENGTH. ALLOW GROUT TO CURE UNDISTURBED TO THE SPECIFIED TEST STRENGTH.

7) PLACE ANCHOR BEARING PLATE AND CONDUCT PERFORMANCE OR PROOF TESTS IN ACCORDANCE WITH SECTION 518 OF THE SPECIAL PROVISIONS. THE DESIGN LOAD (DL) USED IN THE TEST PROCEDURE SHALL BE THE LOCK-OFF LOAD SHOWN IN THE PILE DATA TABLE. AT THE COMPLETION OF TESTING, REDUCE TENSION TO THE LOCK-OFF LOAD AND TRANSFER LOAD TO THE BEARING PLATE BY TIGHTENING THE NUT.

8) AFTER ANCHOR HAS BEEN ACCEPTED BY THE ENGINEER, PLACE SECONDARY GROUT AND ANCHORAGE GROUT OR CONCRETE COVER.

DO NOT SCALE FROM THESE DRAWINGS USE DIMENSIONS

Project As Built Drawings have been reviewed by the Project Engineer. To the best of his/her knowledge, they represent the project as constructed.

Proj. Eng _____ Date 6/21/17

DESIGNED BY: T. DOGGETT

STATE OF ALASKA
Timothy H Doggett
CE-9027
REGISTERED PROFESSIONAL ENGINEER
10/02/2012

CHECKED BY: K. MILLER

DRAWN BY: STAFF

STATE OF ALASKA
DEPARTMENT OF TRANSPORTATION & PUBLIC FACILITIES
SOUTHEAST REGION

WRANGELL FERRY TERMINAL IMPROVEMENTS

DOLPHIN S2 ANCHOR DETAILS

PATH: Q:\WRG\69432\PLANSET\MF\11_ANCHOR DETAILS.DWG
TAB: 11 Tuesday, October 02, 2012 2:24:53 PM

REVISIONS		
NO.	DATE	DESCRIPTION

PROJECT DESIGNATION	YEAR	SHEET NO.	TOTAL SHEETS
69432 SHAK-MGE-STP-0943(25)	2012	11	21

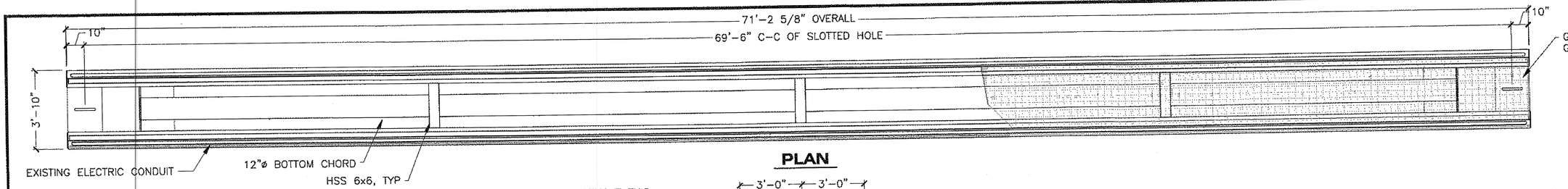

PLAN

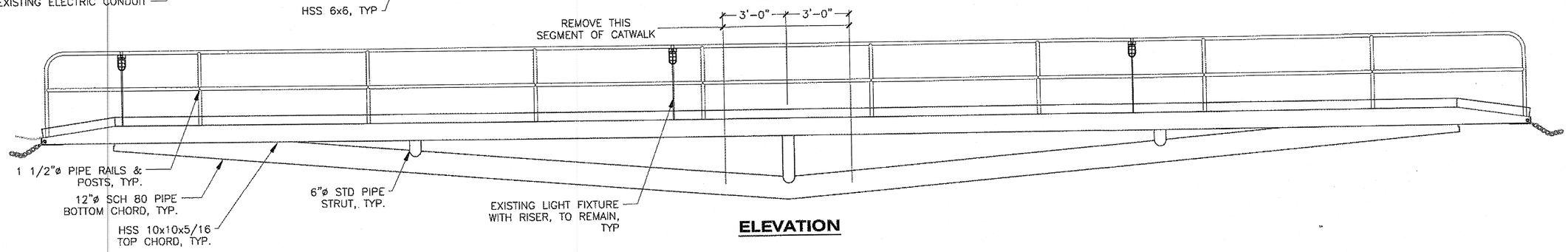

ELEVATION

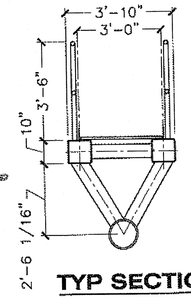

TYP SECTION

EXISTING

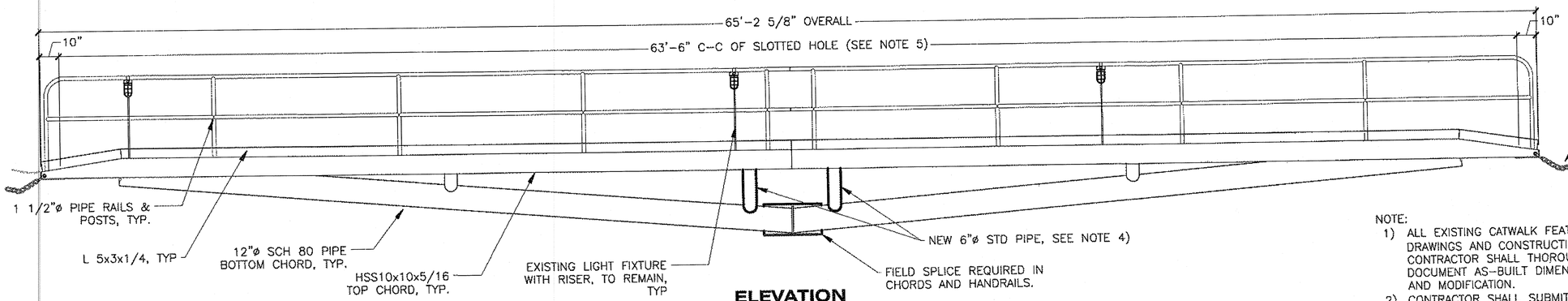

ELEVATION

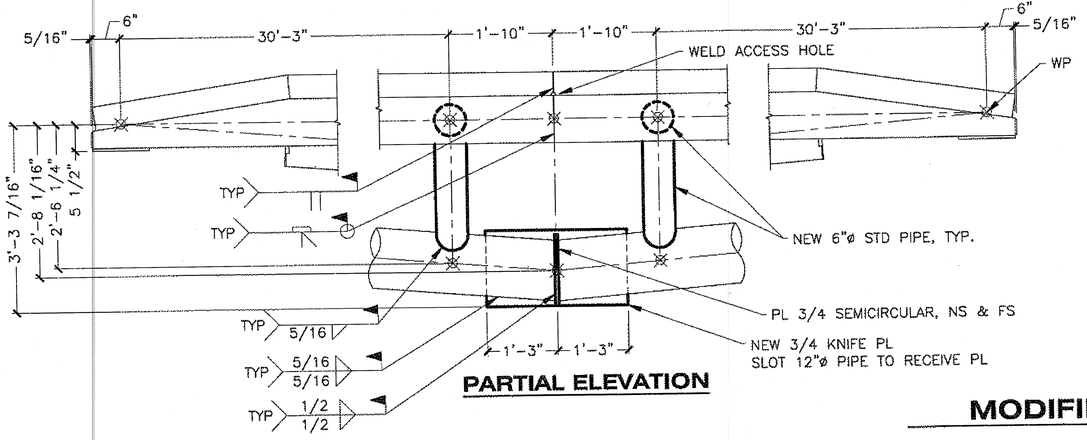

PARTIAL ELEVATION

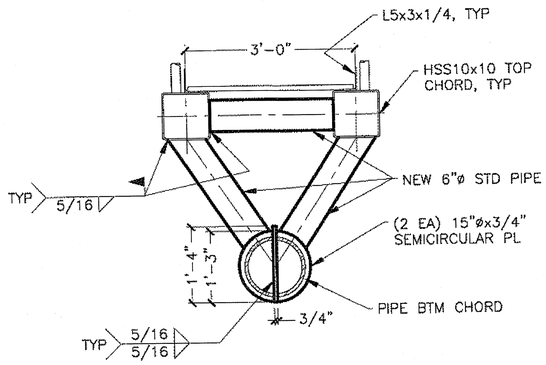

SECTION

MODIFIED

(1/12) S2 - S3 CATWALK

NOTE:

1) ALL EXISTING CATWALK FEATURES NOT SHOWN. REFER TO SHOP DRAWINGS AND CONSTRUCTION PLANSET FOR PROJECT F-095-3(1). CONTRACTOR SHALL THOROUGHLY INSPECT THE EXISTING STRUCTURE AND DOCUMENT AS-BUILT DIMENSIONS AND CONDITIONS PRIOR TO REMOVAL AND MODIFICATION.
2) CONTRACTOR SHALL SUBMIT REMOVAL AND REPAIR PLAN FOR APPROVAL PRIOR TO START OF WORK. THE CATWALK MAY NOT BE SUPPORTED BY THE HANDRAILS. BLOCKING OR SHORING IS REQUIRED TO SUPPORT THE CATWALK AFTER REMOVAL.
3) REFER TO SECTION 504-3.03 FOR REPAIR OF PAINT COATINGS.
4) AT CONTRACTOR'S OPTION, 6" DIAM STRUTS MAY BE INSTALLED PRIOR TO CUTTING OF CHORDS TO AID IN MAINTAINING ALIGNMENT.
5) VERIFY DISTANCE BETWEEN CATWALK RETAINING STUDS ON DOLPHINS S2 AND S3 BEFORE MODIFYING CATWALK. STUD SPACING SHOULD EQUAL SPACING BETWEEN CENTER OF SLOTTED HOLES IN CATWALK (± 1").
6) ELECTRICAL CONDUIT AND FIXTURES SHALL BE SALVAGED, IN ACCORDANCE WITH ELECTRICAL DESIGN.
7) PLACE 3/8"ø WEEP HOLE AT BASE OF CLOSED SECTIONS.

DO NOT SCALE FROM THESE DRAWINGS USE DIMENSIONS

Project As Built Drawings have been reviewed by the Project Engineer. To the best of his/her knowledge, they represent the project as constructed.

Proj. Eng _____ Date 6/21/17

DESIGNED BY: T. DOGGETT
CHECKED BY: K. MILLER
DRAWN BY: STAFF
PATH: Q:\WRG\69432\PLANSET\MF\12_CATWALK MODS.DWG
TAB: 12 Tuesday, October 02, 2012 2:24:59 PM

STATE OF ALASKA
Timothy H Doggett
CE-9027
REGISTERED PROFESSIONAL ENGINEER
10/02/2012

STATE OF ALASKA
DEPARTMENT OF TRANSPORTATION & PUBLIC FACILITIES
SOUTHEAST REGION

WRANGELL FERRY TERMINAL IMPROVEMENTS

S2 - S3 CATWALK MODIFICATIONS

REVISIONS NO.	DATE	DESCRIPTION

PROJECT DESIGNATION	YEAR	SHEET NO.	TOTAL SHEETS
69432 SHAK-MGE-STP-0943(25)	2012	12	21

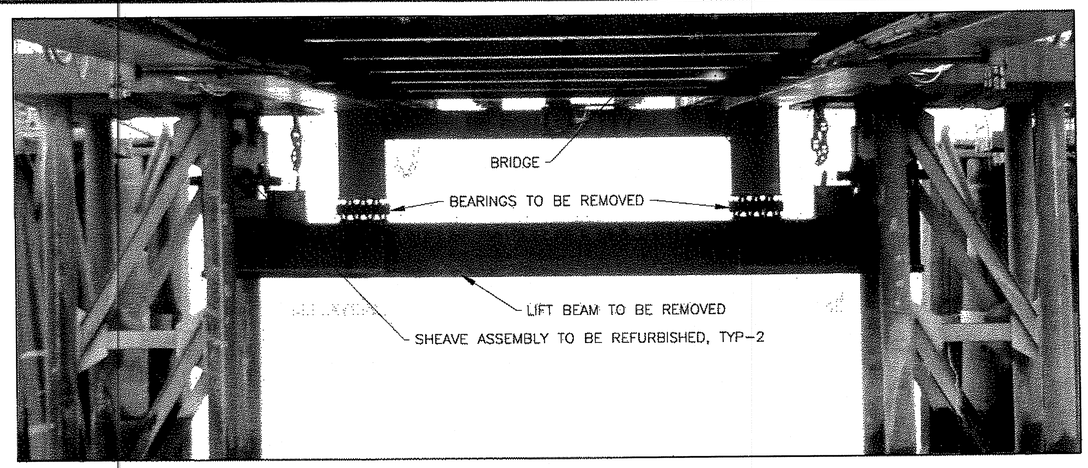

PHOTOGRAPH
LOOKING SEAWARD

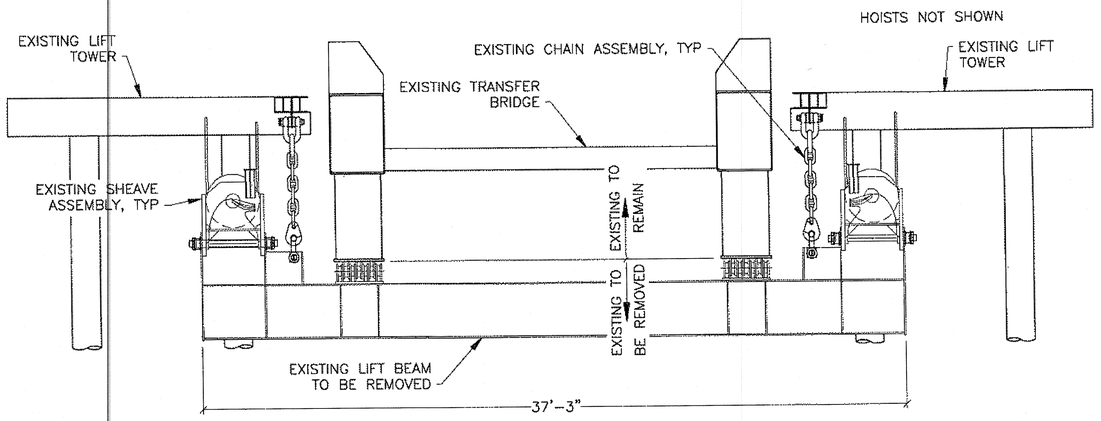

EXISTING ELEVATION

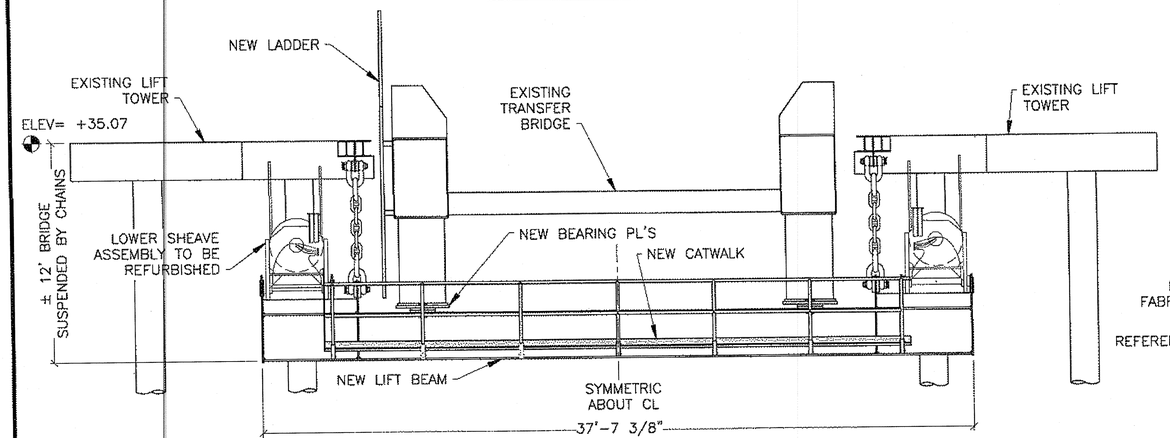

PROPOSED ELEVATION

1/13 LIFT BEAM

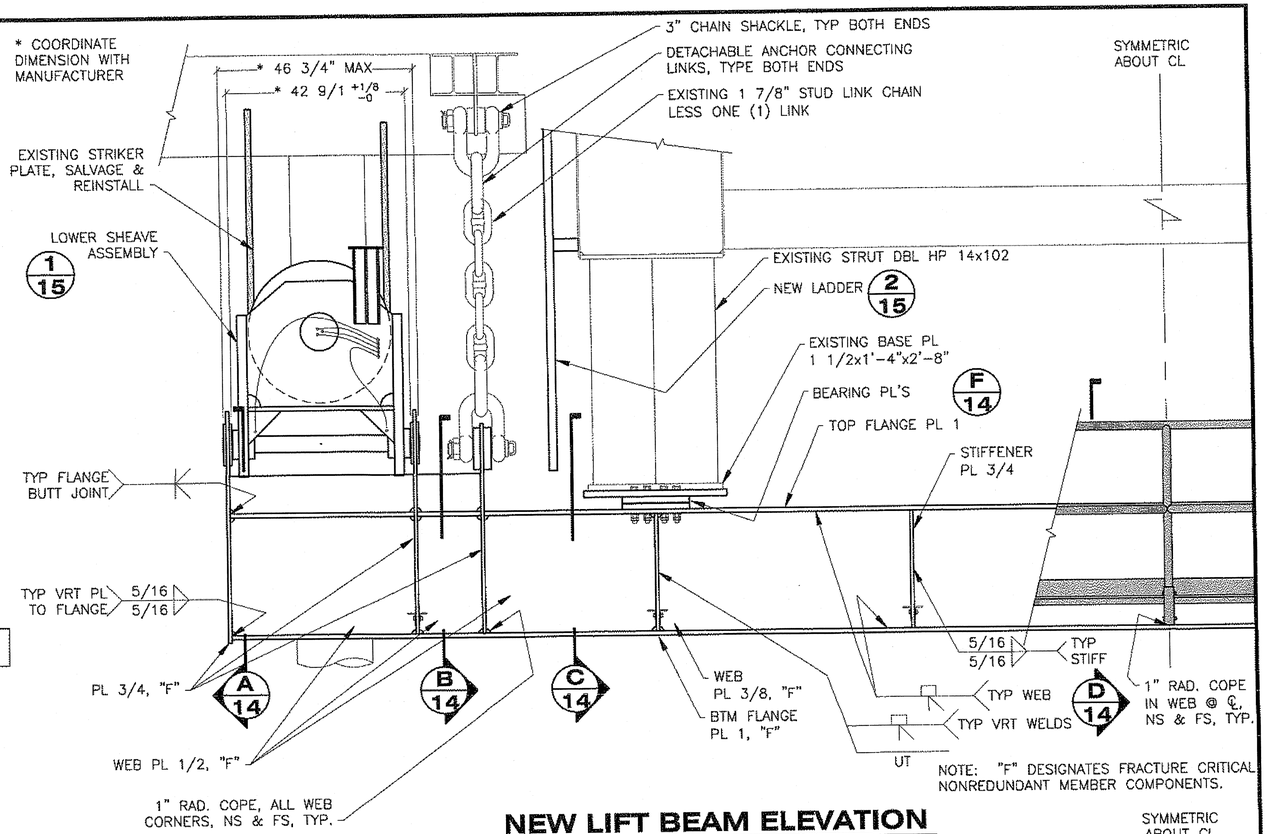

NOTE: "F" DESIGNATES FRACTURE CRITICAL NONREDUNDANT MEMBER COMPONENTS.

NEW LIFT BEAM ELEVATION

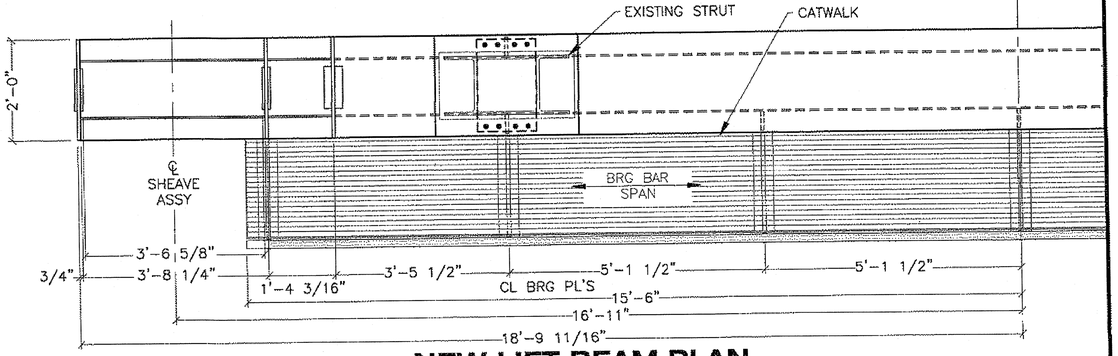

NEW LIFT BEAM PLAN

DO NOT SCALE FROM THESE DRAWINGS USE DIMENSIONS

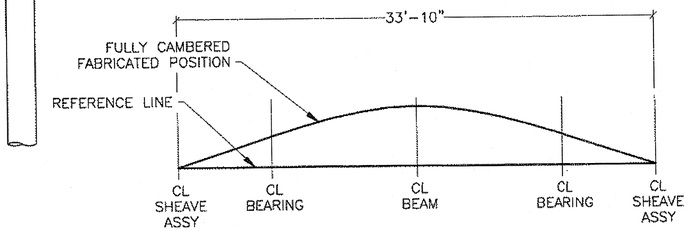

CAMBER DIAGRAM

Project As Built Drawings have been reviewed by the Project Engineer. To the best of his/her knowledge, they represent the project as constructed.

Proj. Eng _____ Date 9/21/13

DESIGNED BY: T. DOGGETT

STATE OF ALASKA
Timothy H Doggett
CE-9027
REGISTERED PROFESSIONAL ENGINEER
10/02/2012

CHECKED BY: K. MILLER

DRAWN BY: STAFF

PATH: Q:\WRG\69432\PLANSET\MF\13-15 LIFT BEAM.DWG

TAB: 13 Tuesday, October 02, 2012 2:25:06 PM

STATE OF ALASKA
DEPARTMENT OF TRANSPORTATION & PUBLIC FACILITIES
SOUTHEAST REGION

WRANGELL FERRY TERMINAL IMPROVEMENTS

LIFT BEAM

REVISIONS NO.	DATE	DESCRIPTION

PROJECT DESIGNATION	YEAR	SHEET NO.	TOTAL SHEETS
69432 SHAK-MGE-STP-0943(25)	2012	13	21

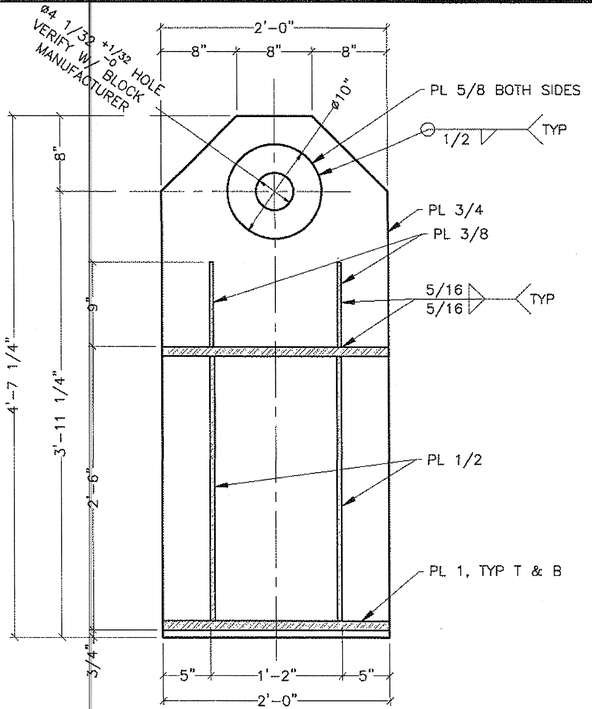

A/14 SECTION

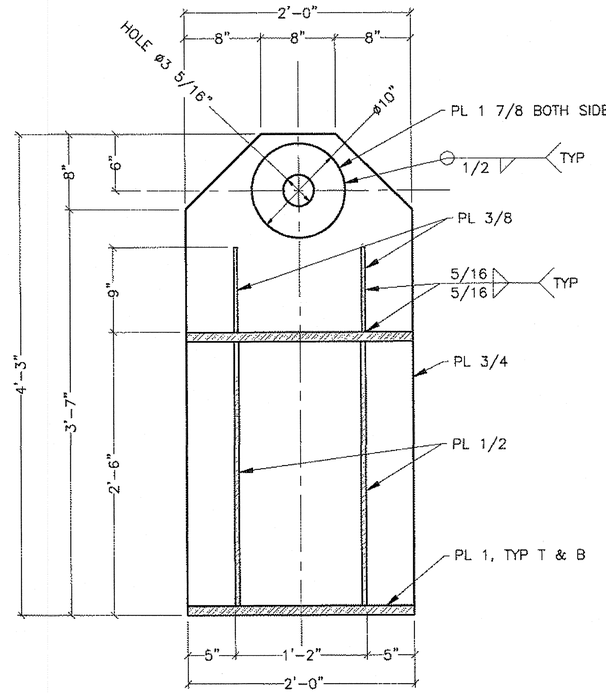

B/14 SECTION

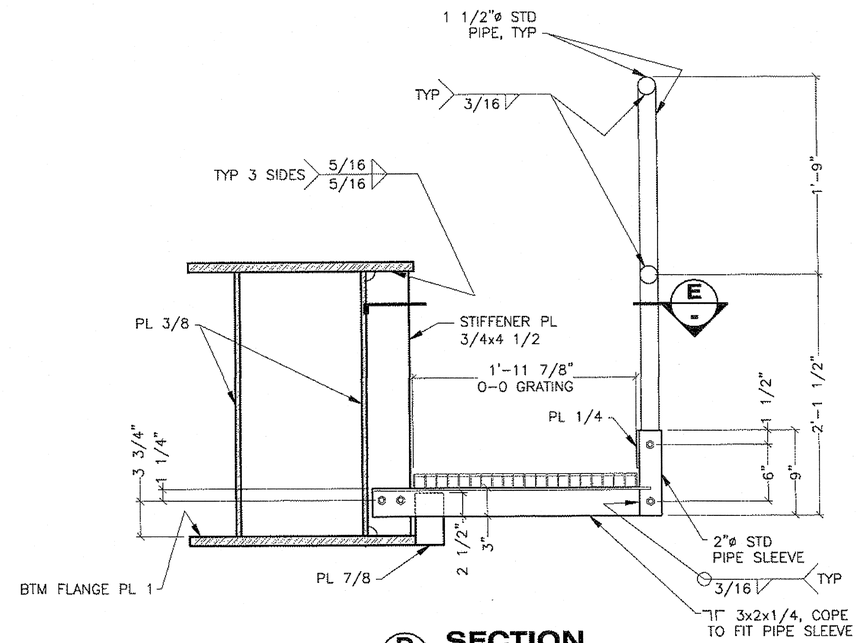

D/14 SECTION

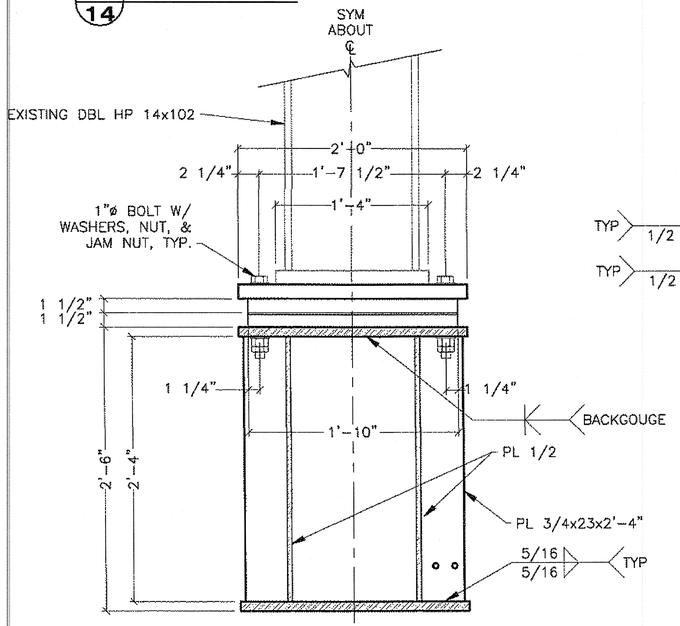

C/14 SECTION

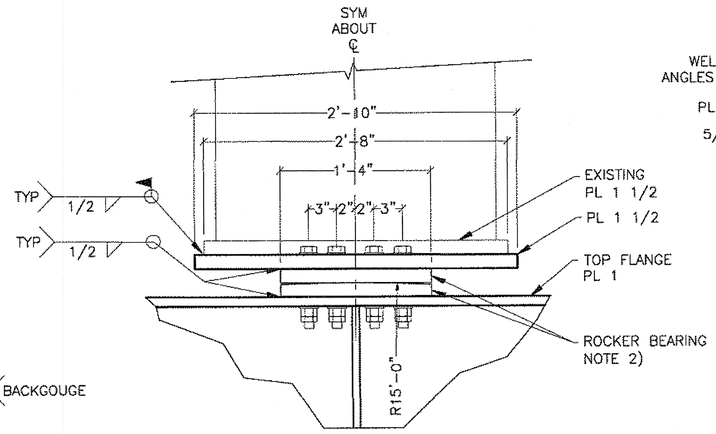

F/14 ELEVATION BEARINGS

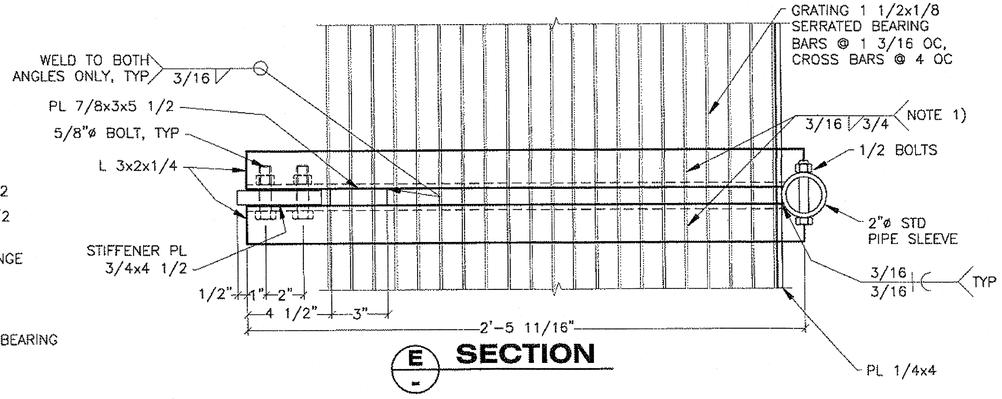

E/- SECTION

NOTES:
1) WELD GRATING TO ALL SUPPORTS AT PANEL EDGES & EVERY 4TH BAR BETWEEN.

2) ROCKER BEARING CONSISTS OF FLAT UPPER PLATE & CONVEX LOWER PLATE. PL 1 1/2, TYP.

DO NOT SCALE FROM THESE DRAWINGS USE DIMENSIONS

DESIGNED BY: T. DOGGETT
CHECKED BY: K. MILLER
DRAWN BY: STAFF

STATE OF ALASKA
Timothy H Doggett
CE-9027
REGISTERED PROFESSIONAL ENGINEER
10/02/2012

STATE OF ALASKA
DEPARTMENT OF TRANSPORTATION & PUBLIC FACILITIES
SOUTHEAST REGION

WRANGELL FERRY TERMINAL IMPROVEMENTS

LIFT BEAM DETAILS

PATH: Q:\WRG\69432\PLANSET\MF\13-15 LIFT BEAM.DWG
TAB: 14 Tuesday, October 02, 2012 2:25:08 PM

REVISIONS NO.	DATE	DESCRIPTION

PROJECT DESIGNATION	YEAR	SHEET NO.	TOTAL SHEETS
69432 SHAK-MGE-STP-0943(25)	2012	14	21

Project As Built Drawings have been reviewed by the Project Engineer. To the best of his/her knowledge, they represent the project as constructed.

Proj. Eng _____ Date 6/21/13

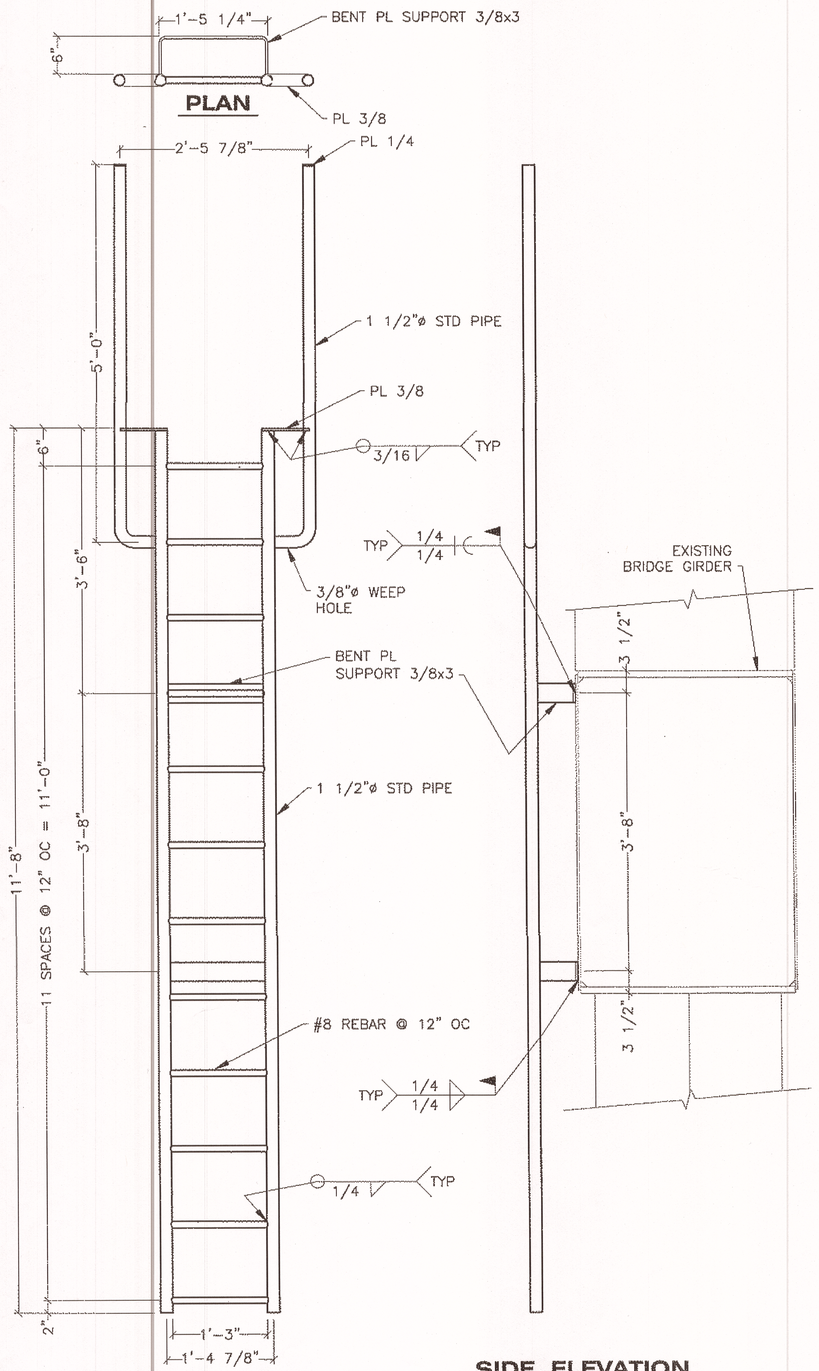

2/15 NEW LADDER

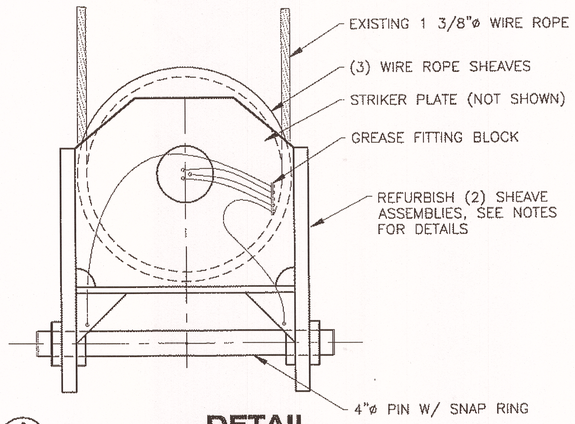

1/15 DETAIL
SHEAVE ASSEMBLY ELEVATION ONE AS SHOWN, ONE OPP HAND

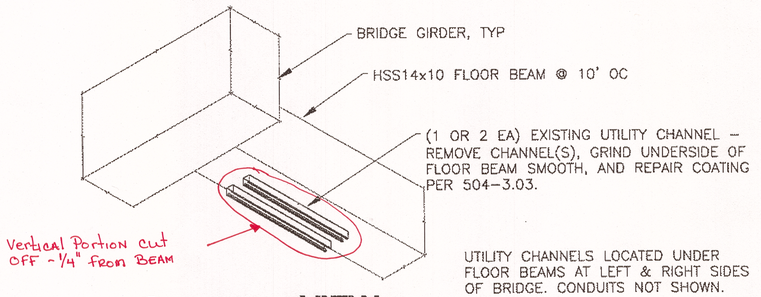

A/15 VIEW UNDERSIDE OF BRIDGE

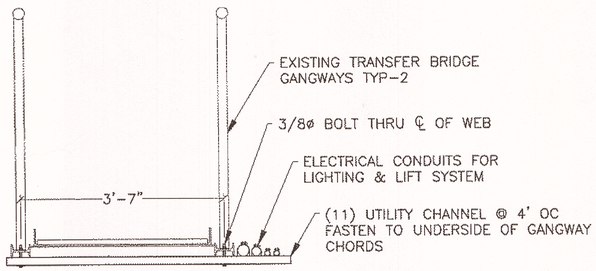

B/15 SECTION GANGWAY

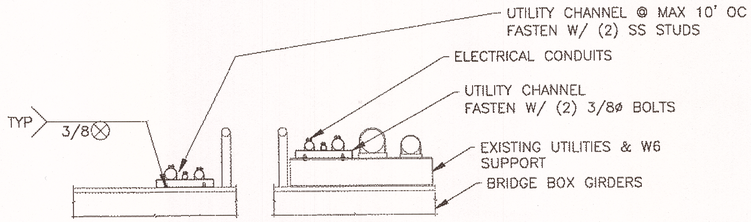

C/15 SECTION TOP OF GIRDERS

NOTES:

1. SCOPE OF WORK CONSISTS OF REPLACING EXISTING BRIDGE LIFT BEAM, REFURBISHING (2) SYNCROLIFT LOWER SHEAVE ASSEMBLIES, AND INSTALLING MAINTENANCE ACCESS LADDER AND CATWALK.

   a. TEMPORARILY SUPPORT SEAWARD END OF THE TRANSFER BRIDGE DURING CONSTRUCTION BY SUSPENDING FROM ADJACENT LIFT TOWERS, SHORING FROM UNDERNEATH, OR OTHER ACCEPTED METHOD. MEANS OF SUPPORTING BRIDGE DURING CONSTRUCTION SHALL BE FURNISHED TO THE DEPARTMENT FOR REVIEW. A SUPPORT SYSTEM THAT SUSPENDS THE TRANSFER BRIDGE SHALL BE DESIGNED AND SEALED BY AN ALASKA LICENSED PROFESSIONAL ENGINEER. HOISTS REACTIONS UNDER BRIDGE SELF WEIGHT ALONE ARE 45 AND 50 TONS WITH THE APRON IN THE STOWED POSITION.

   b. REMOVE EXISTING TRANSFER BRIDGE LIFT BEAM. COMPLETELY REMOVE THE HINGES FROM THE BRIDGE STRUT BASE PLATES. GRIND THE UNDERSIDE OF THE BASE PLATE SMOOTH, FLAT AND REPAIR THE PAINT COATING.

   c. REFURBISH LOWER SHEAVE ASSEMBLIES AT BOTH ENDS OF THE LIFT BEAM IN ACCORDANCE WITH SYNCROLIFT MANUFACTURER'S INSTRUCTIONS AND M&O MANUAL.

      DO NOT REMOVE WIRE ROPE FROM THE HOISTS. LANG LAY ROPE WILL TWIST WHEN UNLOADED AND MUST BE SECURELY RESTRAINED TO PREVENT ROPE DAMAGE WHEN SHEAVE ASSEMBLIES ARE REMOVED.

      SALVAGE, CLEAN, INSPECT, AND REUSE WIRE ROPE SHEAVES. ALL OTHER COMPONENTS SHALL BE REPLACED WITH NEW PARTS, SUCH AS BUT NOT LIMITED TO SHEAVE HOUSING, PINS, LOWER SHAFTS, BEARINGS, SPACERS, SEALS, WASHERS, RETAINING RINGS, FITTINGS AND FASTENERS. ASSEMBLE WITH LARGE SHEAVE ON THE SEAWARD SIDE OF THE BLOCK AND NOTE THE SHEAVE ASSEMBLIES ARE RIGHT AND LEFT HANDED. ENSURE SHEAVES HAVE BEEN PROPERLY LUBRICATED AND ALL CAVITIES HAVE BEEN FILLED WITH GREASE TO PREVENT WATER INTRUSION.

      ALL COMPONENTS SHALL BE FURNISHED BY PEARLSON SHIPLIFT CORPORATION, MIAMI, FL (305) 704-7829; ROLLS ROYCE NAVAL MARINE, WALPOLE MA (508) 668-9610; OR AN APPROVED EQUAL. SHEAVE HOUSING SHALL BE PAINTED IN ACCORDANCE WITH SPEC 504-3.03.

      SHEAVE MANUFACTURER SHALL FURNISH A TECHNICAL REPRESENTATIVE TO OVERSEE BLOCK REFURBISHMENT AND ENSURE COMPLIANCE WITH MANUFACTURER'S PROCEDURES. TECHNICIAN SHALL BE ONSITE CONTINUALLY FROM BEGINNING OF DISASSEMBLY THROUGH REASSEMBLY AND TESTING.

      USED LOWER SHEAVE ASSEMBLIES SHALL REMAIN THE PROPERTY OF THE STATE. PLACE SALVAGED PARTS ON PALLETS AND STORE ON SITE AS DIRECTED BY THE ENGINEER.

   d. INSTALL NEW LIFT BEAM AND LOWER SHEAVE ASSEMBLIES TO THE TRANSFER BRIDGE. ALIGN AND FASTEN LIFT BEAM BEARING PLATES TO THE STRUT BASE PLATES BY WELDING. GREASE ROCKER BEARING CONTACT SURFACES PRIOR TO ASSEMBLY. APPLY FULL BRIDGE DEAD LOAD TO THE LIFT BEAM, MAKE MOUNTING BOLTS SNUG TIGHT ENSURING ALL FAYING SURFACES ARE IN CONTACT, AND LOCK WITH JAM NUTS.

   e. MODIFY BRIDGE SUPPORT CHAIN ASSEMBLIES. DISASSEMBLE DETACHABLE ANCHOR LINK, REMOVE (1) STUD CHAIN LINK, AND REASSEMBLE DETACHABLE ANCHOR LINK. THE PIN OF THE LOWER SHACKLE SHALL BE PARALLEL TO THE LIFT BEAM WITH NO TWISTS IN THE CHAIN.

   f. LUBRICATE, OPERATE, AND ADJUST TRAVEL LIMITS OF SYNCROLIFT LIFT SYSTEM AS NEEDED. LIFT BEAM, MAINTENANCE CATWALK, AND ACCESS LADDER SHALL NOT CONFLICT WITH OR CONTACT LIFT TOWER DECK OR PILING.

2. MATERIALS, WELDING, AND FABRICATION OF THE LIFT BEAM SHALL CONFORM TO AWS D1.5 LATEST EDITION. THE TRANSFER BRIDGE LIFT BEAM IS A FRACTURE CRITICAL MEMBER AND SUBJECT TO THE ADDITIONAL WELDING PROVISIONS OF AWS D1.5 CLAUSE 12. AASHTO/AWS FRACTURE CONTROL PLAN FOR NONREDUNDANT MEMBERS. THE COMPONENTS OF THE LIFT BEAM THAT ARE FRACTURE CRITICAL HAVE BEEN DESIGNATED "F" ON THE DRAWINGS.

3. CONTRACTOR SHALL PROVIDE NDT AS REQUIRED IN AWS D1.5 CLAUSES 6 AND 12.

4. ALL STEEL SHALL CONFORM TO ASTM A709 GRADE 50F, ZONE 2. NO SPLICES ARE PERMITTED BY THE SUPPLIER OR FABRICATOR IN THE BOTTOM (TENSION) FLANGE. LIFT BEAM AND ROCKER BEARING SHALL BE HDG.

DO NOT SCALE FROM THESE DRAWINGS USE DIMENSIONS

Project As Built Drawings have been reviewed by the Project Engineer. To the best of his/her knowledge, they represent the project as constructed.
Proj. Eng _____ Date 6/4/13

DESIGNED BY: T. DOGGETT
CHECKED BY: K. MILLER
DRAWN BY: STAFF

STATE OF ALASKA 49th Timothy H Doggett CE-9027 REGISTERED PROFESSIONAL ENGINEER 10/02/2012

STATE OF ALASKA
DEPARTMENT OF TRANSPORTATION & PUBLIC FACILITIES
SOUTHEAST REGION

WRANGELL FERRY TERMINAL IMPROVEMENTS

LIFT BEAM DETAILS MISC. BRIDGE MODIFICATIONS

PATH: Q:\WRG\69432\PLANSET\MF\13-15 LIFT BEAM.DWG
TAB: 15 Tuesday, October 02, 2012 2:25:10 PM

REVISIONS NO.	DATE	DESCRIPTION

PROJECT DESIGNATION	YEAR	SHEET NO.	TOTAL SHEETS
69432 SHAK-MGE-STP-0943(25)	2012	15	21

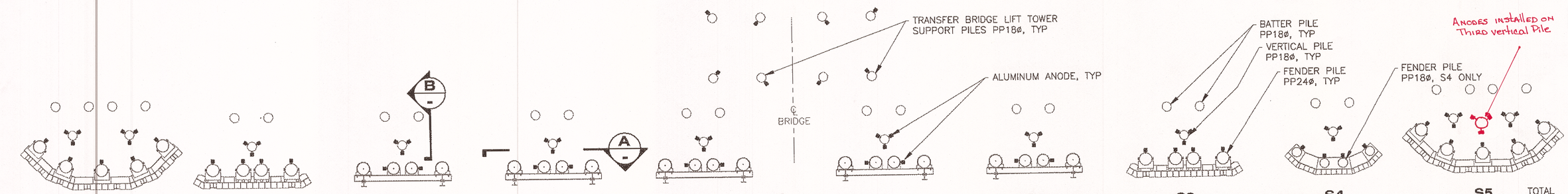

STRUCTURE	N5	N4	N3	N2	N1	TWR	TWR	S1	S2	S3	S4	S5	TOTAL
ANODE (FIELD)	11	7	3	3	3	4	4	3	3	7	7	11	66
ANODE (SHOP)	–	–	2	2	2	–	–	2	2	–	–	–	10

1/16 PLAN - ANODE LAYOUT TERMINAL SCHEMATIC

CATHODIC PROTECTION SYSTEM:

1. INSTALL ANODES ON ALL DOLPHIN STRUCTURES:
   a. THREE ANODES ON VERTICAL PILE OF NEW AND EXISTING BACKUP STRUCTURES
   b. ONE ANODE ON EACH FENDER PILE OF EXISTING STRUCTURES
   c. TWO ANODES ON EACH NEW FENDER PANEL
2. INSTALL ONE ANODE ON EACH VERTICAL SUPPORT PILE OF TRANSFER BRIDGE LIFT TOWER.
3. INSTALL NEW BONDING CABLE BETWEEN FENDER PANEL AND DOLPHIN CAP ON ALL STRUCTURES (10 TOTAL).
4. REMOVE SPENT ANODES OR FAILED BONDING CABLES WHERE ENCOUNTERED.

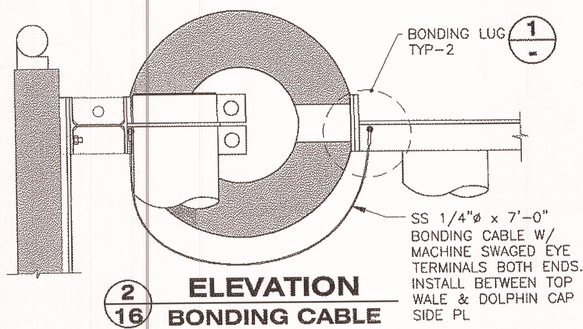

2/16 ELEVATION BONDING CABLE

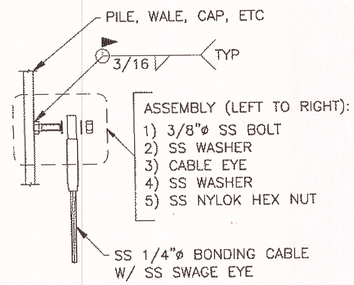

1/- DETAIL

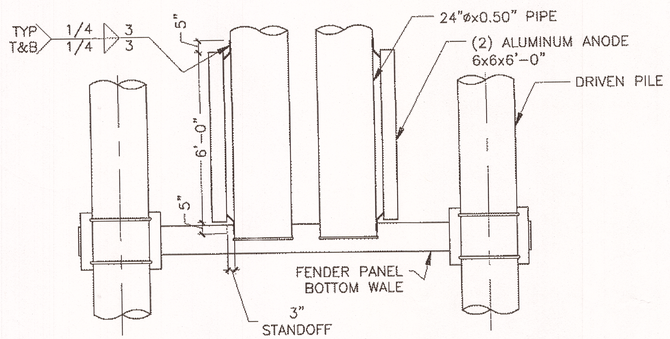

A/16 ELEVATION ANODE (SHOP INSTALLED)

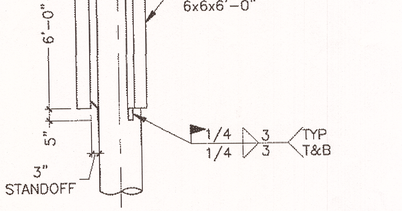

B/- ELEVATION ANODE (FIELD INSTALLED)

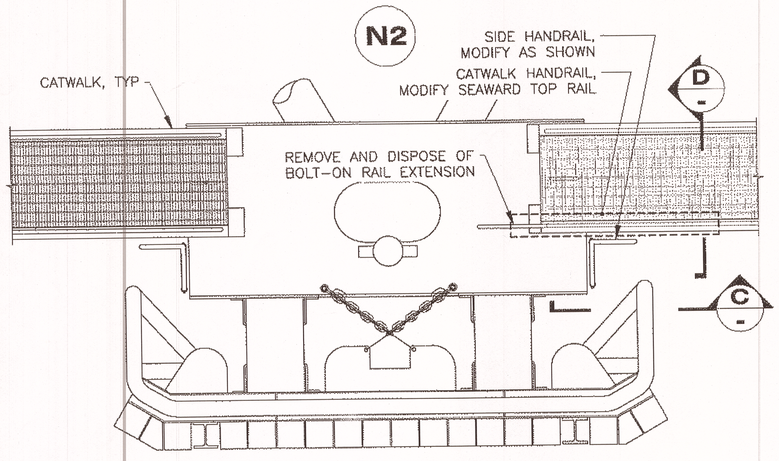

4/16 DETAIL HANDRAIL MODIFICATION

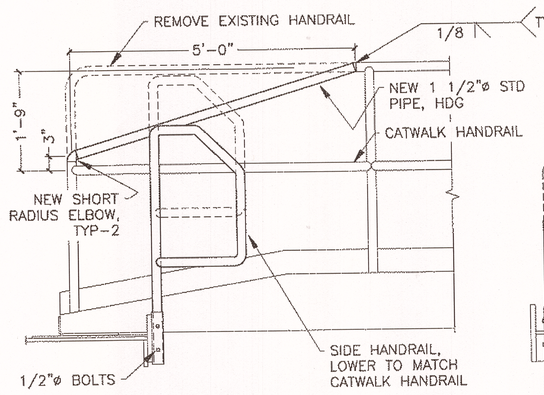

C/- ELEVATION

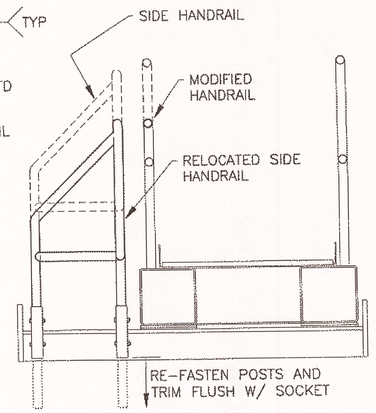

D/- SECTION

DO NOT SCALE FROM THESE DRAWINGS USE DIMENSIONS

DESIGNED BY: T. DOGGETT
CHECKED BY: K. MILLER
DRAWN BY: STAFF
PATH: O:\WRG\69432\PLANSET\MF\16_HANDRAIL MODS & ANODE DETS_V1.DWG
TAB: 16 Tuesday, October 02, 2012 2:25:16 PM

STATE OF ALASKA
49th
Timothy H Doggett
CE-9027
REGISTERED PROFESSIONAL ENGINEER
10/02/2012

STATE OF ALASKA
DEPARTMENT OF TRANSPORTATION & PUBLIC FACILITIES
SOUTHEAST REGION

WRANGELL FERRY TERMINAL IMPROVEMENTS

ANODE DETAILS N1-N2 CATWALK MODIFICATIONS

REVISIONS		
NO.	DATE	DESCRIPTION

PROJECT DESIGNATION	YEAR	SHEET NO.	TOTAL SHEETS
69432 SHAK-MGE-STP-0943(25)	2012	16	21

Project As Built Drawings have been reviewed by the Project Engineer. To the best of his/her knowledge, they represent the project as constructed.

Proj. Eng [signature] Date 6/21/17

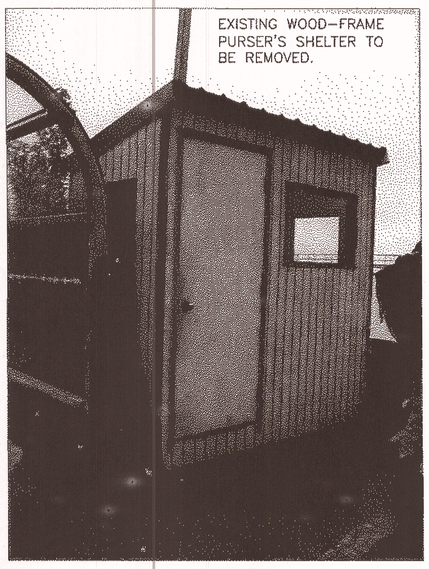

1/- **PHOTO**
EXISTING PURSER'S SHELTER

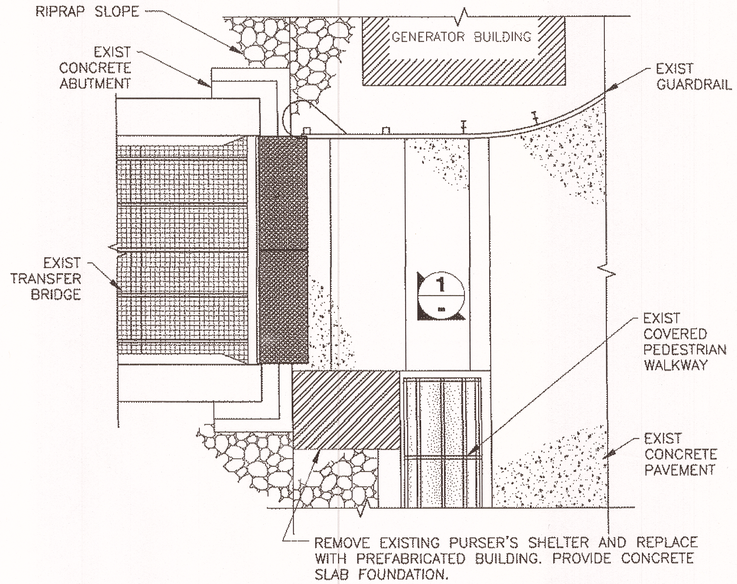

1/17 **GENERAL LAYOUT**

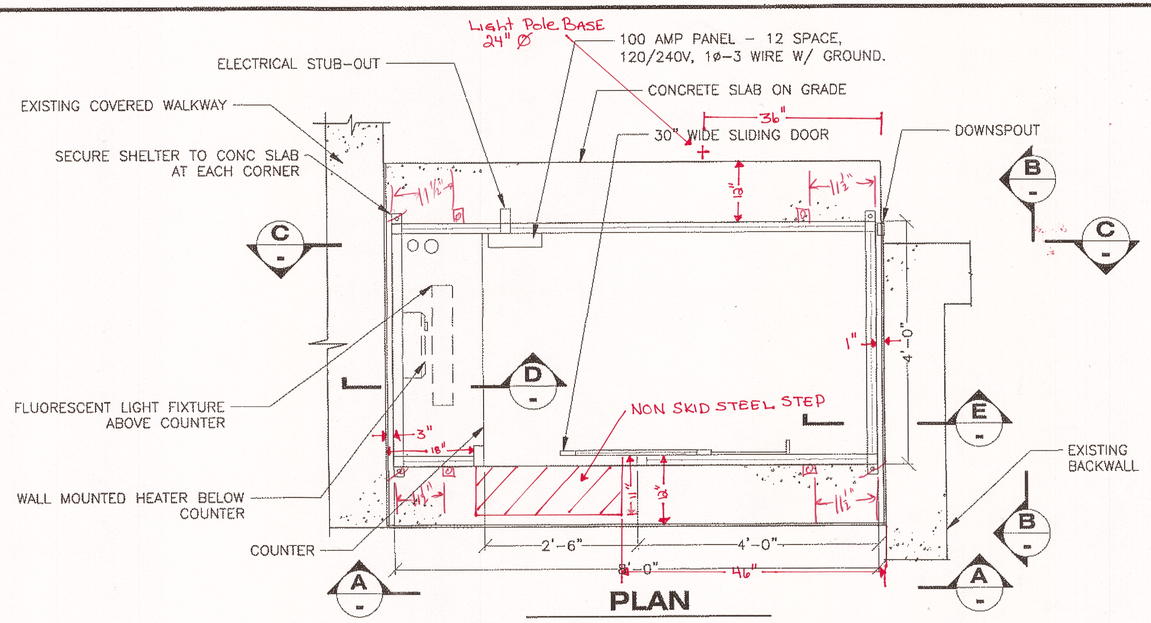

PLAN

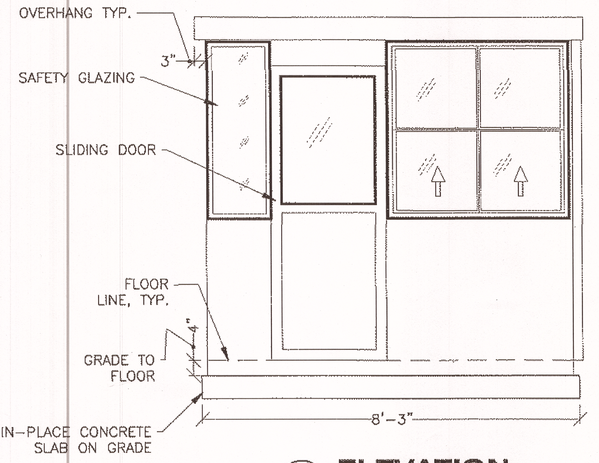

A/- **ELEVATION**

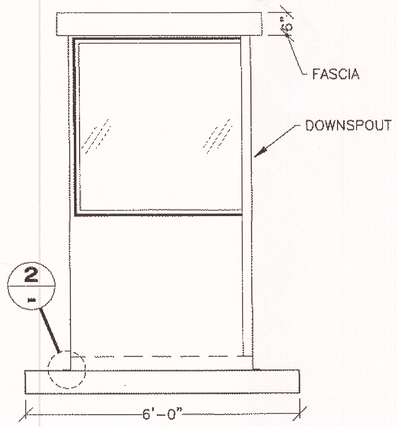

B/- **ELEVATION**

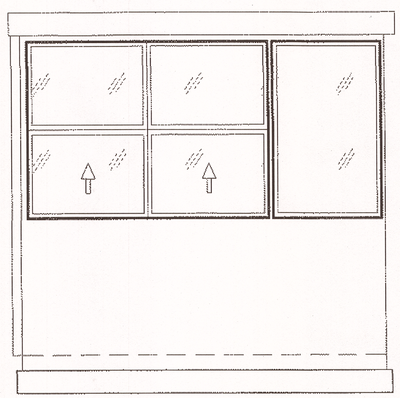

C/- **ELEVATION**

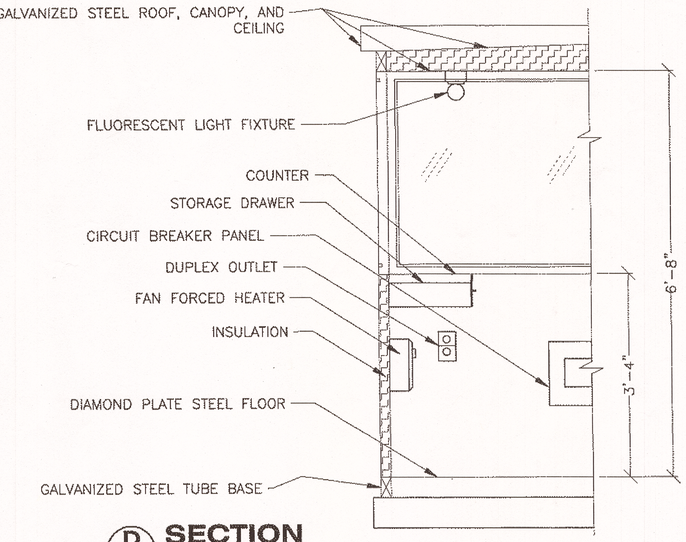

D/- **SECTION**

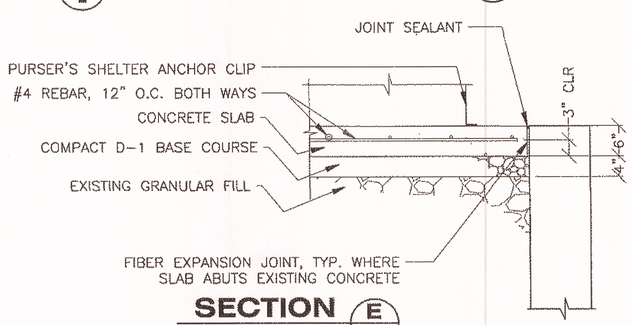

SECTION E/-

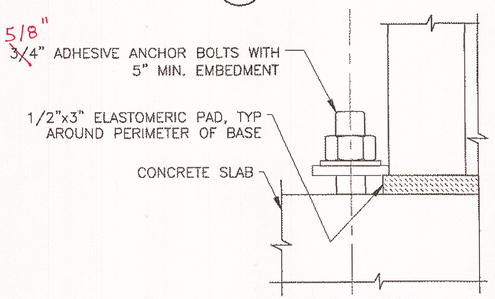

2/- **DETAIL**

DO NOT SCALE FROM THESE DRAWINGS USE DIMENSIONS

Project As Built Drawings have been reviewed by the Project Engineer. To the best of his/her knowledge, they represent the project as constructed.
Proj. Eng _____ Date 6/21/17

DESIGNED BY: T. DOGGETT
STATE OF ALASKA – 49th – Timothy H Doggett – CE-9027 – REGISTERED PROFESSIONAL ENGINEER – 10/02/2012
CHECKED BY: K. MILLER
DRAWN BY: STAFF

STATE OF ALASKA
DEPARTMENT OF TRANSPORTATION & PUBLIC FACILITIES
SOUTHEAST REGION

WRANGELL FERRY TERMINAL IMPROVEMENTS

PURSER'S SHELTER

PATH: Q:\WRG\69432\PLANSET\MF\17_PURSERS SHELTER.DWG
TAB: 17 Tuesday, October 02, 2012 2:25:22 PM

REVISIONS NO.	DATE	DESCRIPTION

PROJECT DESIGNATION	YEAR	SHEET NO.	TOTAL SHEETS
69432 SHAK-MGE-STP-0943(25)	2012	17	21

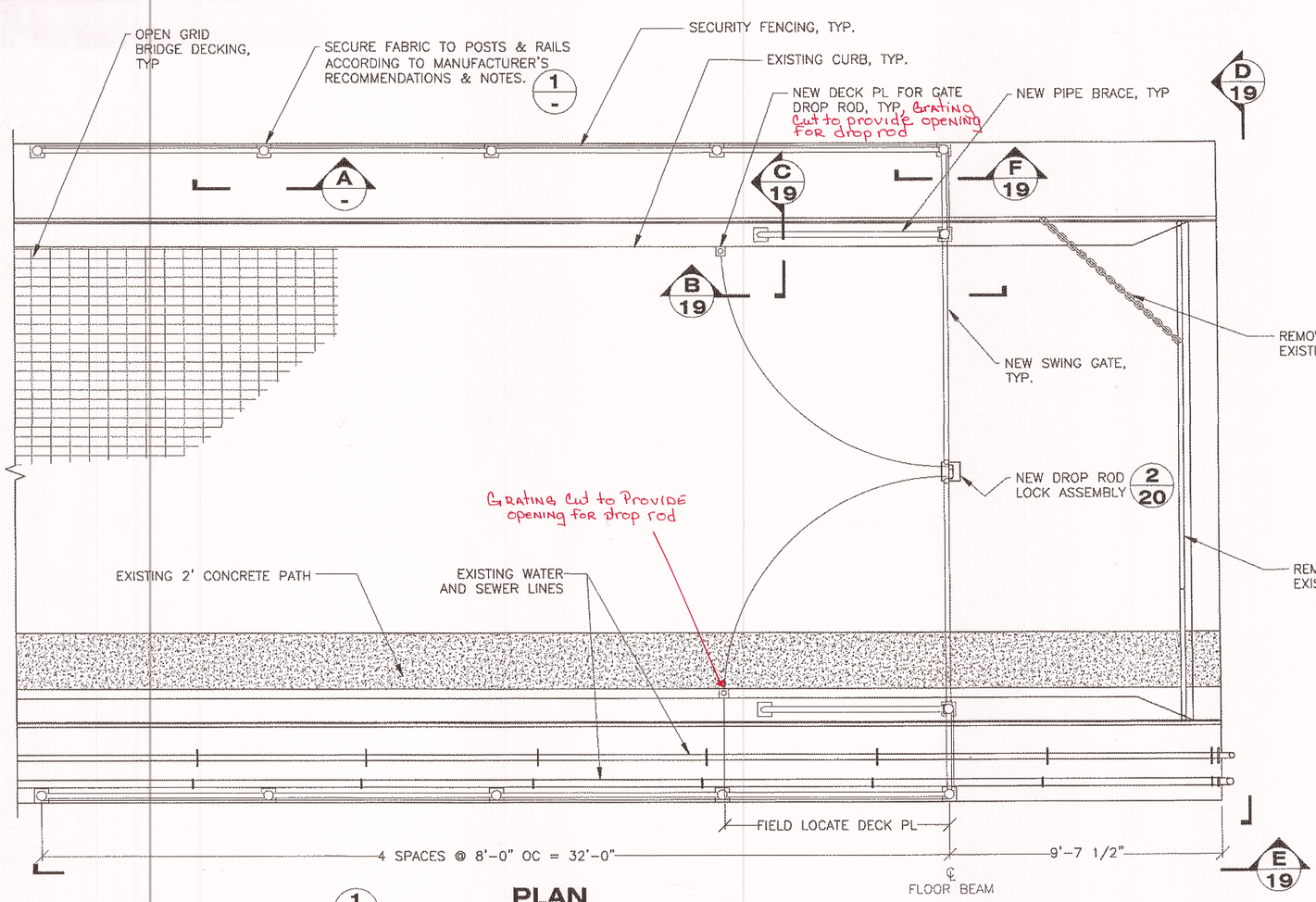

1 / 18 **PLAN**

BRIDGE SECURITY FENCE

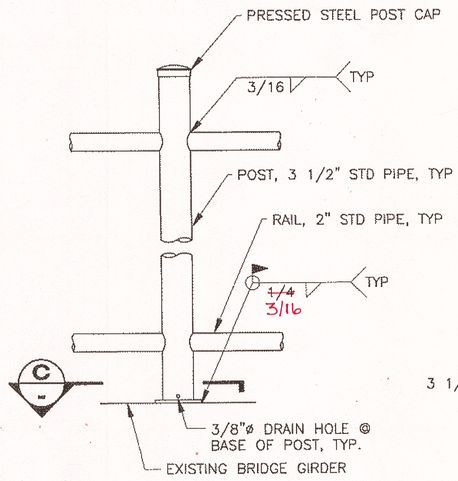

A - **ELEVATION**

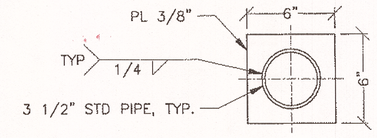

C - **SECTION**

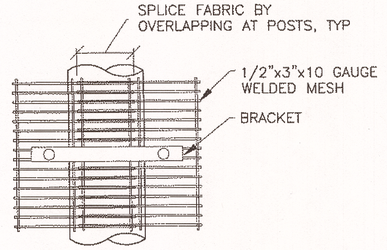

ELEVATION

EXTERIOR FACE OF FENCE

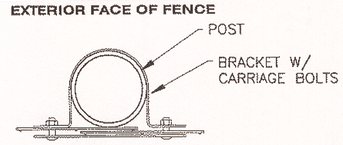

SECTION

1 / - **DETAIL**

GENERAL FENCE NOTES:

1. FIELD VERIFY ALL GATE AND FENCE DIMENSIONS PRIOR TO FABRICATION AND INSTALLATION. PROVIDE SHOP DRAWINGS & MATERIAL SUBMITTAL FOR APPROVAL PRIOR TO MATERIAL PROCUREMENT.
2. MODIFY FENCING AS REQUIRED TO PROVIDE CLEARANCE & PENETRATIONS FOR EXISTING UTILITIES & STRUCTURES INCLUDING ELECTRICAL CONDUIT, PIPING, RAILINGS, LIGHTING, PLUMBING, ETC.
3. ALL POSTS, RAILS, AND FRAMES SHALL BE SCHEDULE 40 PIPE OF THE NOMINAL DIAMETER INDICATED ON THE PLANS.
4. STEEL PIPE FRAMEWORK AND ALL ACCESSORIES SHALL BE HOT DIP GALVANIZED IN ACCORDANCE WITH ASTM A123. HARDWARE COATINGS SHALL CONFORM TO ASTM A153.
5. WELDED WIRE FABRIC SHALL BE FABRICATED FROM PRE-GALVANIZED LOW CARBON STEEL WIRE IN ACCORDANCE WITH ASTM F2453. MESH SIZE: 1/2 IN.x3 IN.x10 GAUGE. AFTER WELDING COAT PANEL WITH 4 MIL MINIMUM POLYMER COATING. ALL CUT ENDS SHALL BE COATED WITH VINYL AT THE FACTORY. FABRIC MANUFACTURER: C.E. SHEPARD COMPANY, HOUSTON, TX, OR AN APPROVED EQUAL.
6. FITTINGS AND ACCESSORIES: POST TOPS ARE PRESSED STEEL FOR TUBULAR POST. TENSION BANDS SHALL BE HEAVY PRESSED STEEL, 3/4 IN.x1/10 IN. NOMINAL FASTENED WITH 5/16" CARRIAGE BOLTS. BRACKETS SHALL BE 1 IN.x10 GAUGE, TWO PIECE BRACKETS FASTENED WITH 5/16" CARRIAGE BOLTS.
5. SECURE FABRIC TO END, CORNER AND GATE POST WITH TENSION BANDS AT INTERVALS NOT TO EXCEED 15 IN. SECURE FABRIC TO LINE POST AND RAILS WITH BRACKETS AT INTERVALS NOT TO EXCEED 18 IN.
6. PROVIDE 3/8"ø WEEP HOLES AT BASE OF ALL POSTS & BRACES.
7. ATTACH FENCE FABRIC TO EXTERIOR FACE OF POSTS & GATE.
8. GATE HINGES SHALL ALLOW THE GATES TO OPEN AND CLOSE WITHOUT BINDING. USE 5 HINGES MIN. FOR EACH GATE LEAF.
9. PROVIDE (1) WEATHER RESISTANT SHROUDED SHACKLE PADLOCK W/ 5/16"ø SHACKLE.
10. THOROUGHLY REMOVE EXISTING COATINGS AND CLEAN ALL PAINTED AND GALVANIZED STEEL SURFACES PRIOR TO FIELD WELDING. REPAIR ALL COATINGS IN ACCORDANCE WITH SPECIFICATION 504-3.03.

DO NOT SCALE FROM THESE DRAWINGS USE DIMENSIONS

Project As Built Drawings have been reviewed by the Project Engineer. To the best of his/her knowledge, they represent the project as constructed.

Proj. Eng _____ Date 12/1/17

DESIGNED BY: T. DOGGETT

STATE OF ALASKA · 49th · Timothy H Doggett · CE-9027 · REGISTERED PROFESSIONAL ENGINEER · 10/02/2012

CHECKED BY: K. MILLER

DRAWN BY: STAFF

STATE OF ALASKA
DEPARTMENT OF TRANSPORTATION & PUBLIC FACILITIES
SOUTHEAST REGION

WRANGELL FERRY TERMINAL IMPROVEMENTS

BRIDGE SECURITY FENCE

PATH: Q:\WRG\69432\PLANSET\MF\18-20_SECURITY GATE.DWG
TAB: 18 Tuesday, October 02, 2012 2:25:29 PM

REVISIONS		
NO.	DATE	DESCRIPTION

PROJECT DESIGNATION	YEAR	SHEET NO.	TOTAL SHEETS
69432 SHAK-MGE-STP-0943(25)	2012	18	21

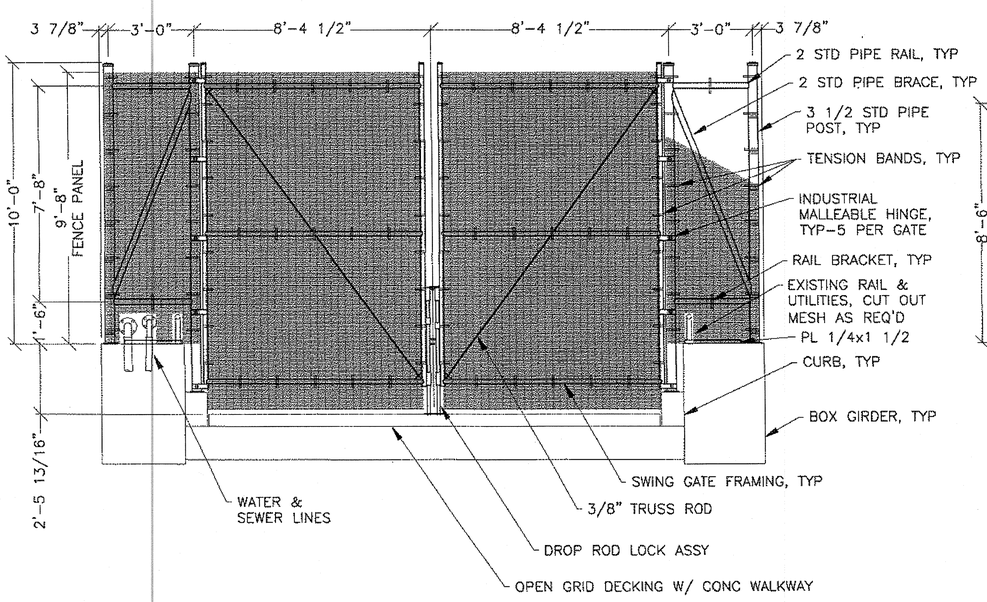

D/19 **ELEVATION**

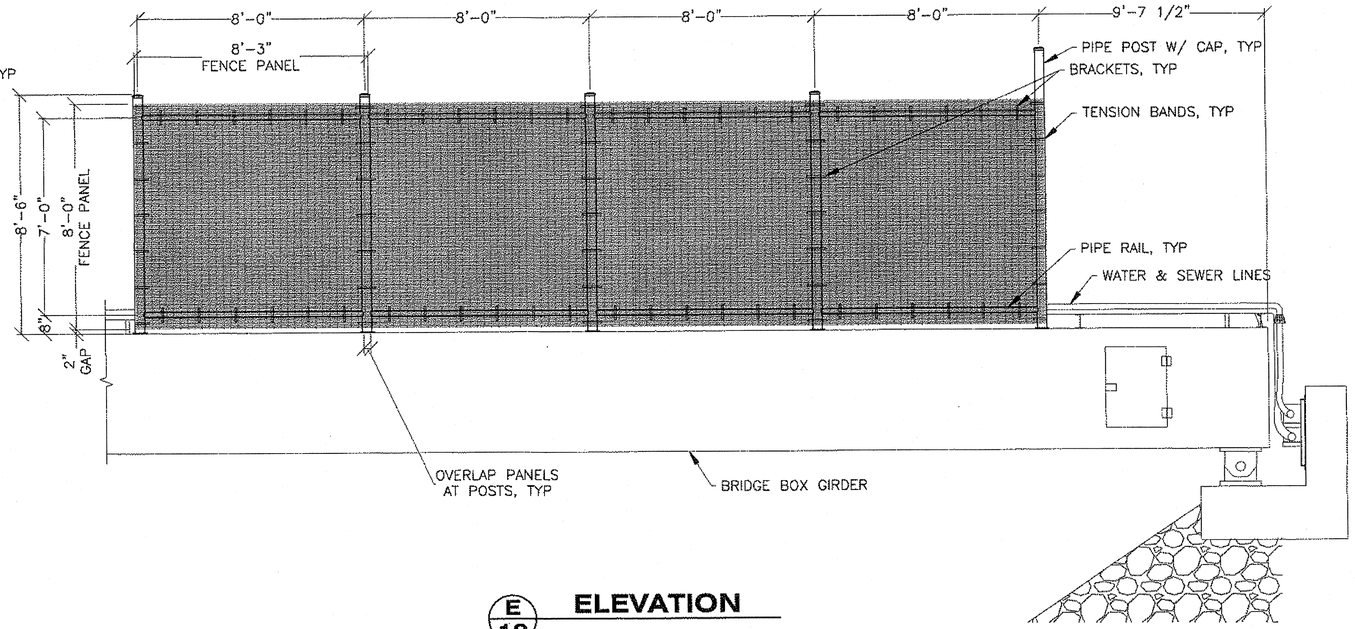

E/19 **ELEVATION**

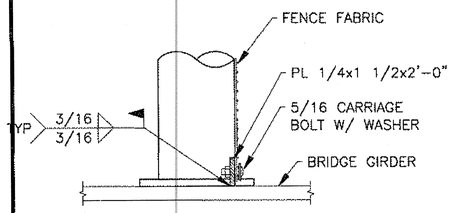

F/19 **SECTION**

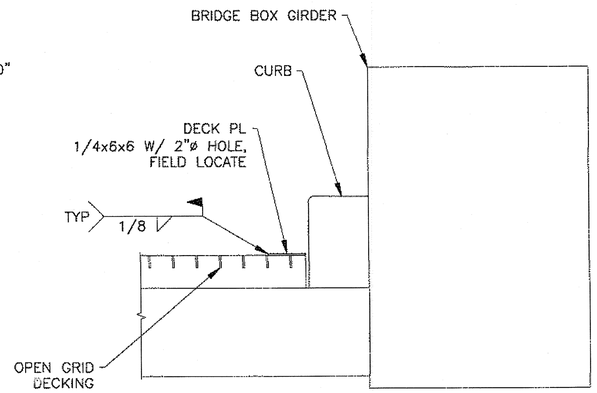

C/19 **SECTION**
DECK PL

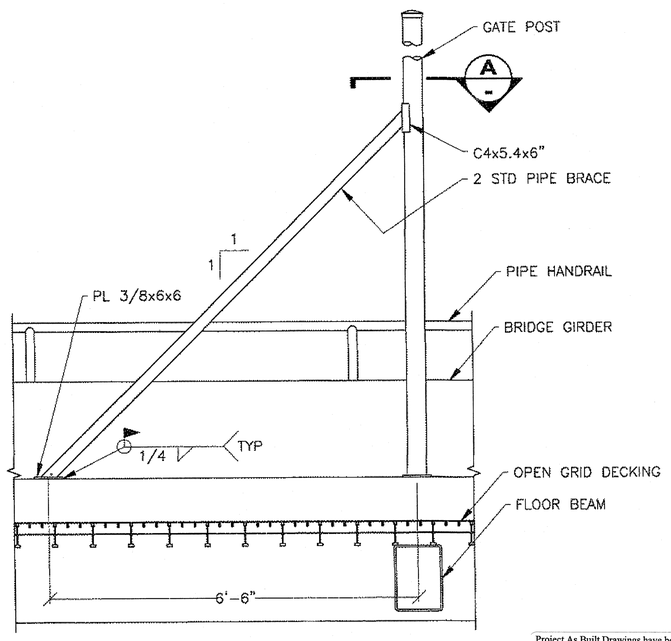

B/19 **ELEVATION**

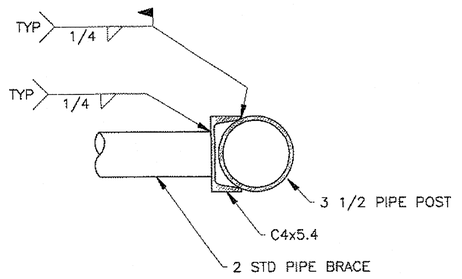

A/- **SECTION**

Project As Built Drawings have been reviewed by the Project Engineer. To the best of his/her knowledge, they represent the project as constructed.

Proj. Eng _____ Date 6/4/17

DO NOT SCALE FROM THESE DRAWINGS USE DIMENSIONS

DESIGNED BY: T. DOGGETT
DRAWN BY: STAFF
CHECKED BY: K. MILLER

STATE OF ALASKA
Timothy H Doggett
CE-9027
REGISTERED PROFESSIONAL ENGINEER
10/02/2012

STATE OF ALASKA
DEPARTMENT OF TRANSPORTATION & PUBLIC FACILITIES
SOUTHEAST REGION

WRANGELL FERRY TERMINAL IMPROVEMENTS

BRIDGE FENCE DETAILS 1

PATH: Q:\WRG\69432\PLANSET\MF\18-20_SECURITY GATE.DWG
TAB: 19 Tuesday, October 02, 2012 2:25:33 PM

REVISIONS NO.	DATE	DESCRIPTION

PROJECT DESIGNATION	YEAR	SHEET NO.	TOTAL SHEETS
69432 SHAK-MGE-STP-0943(25)	2012	19	21

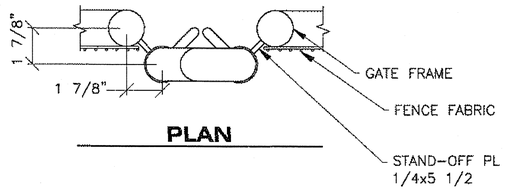

PLAN

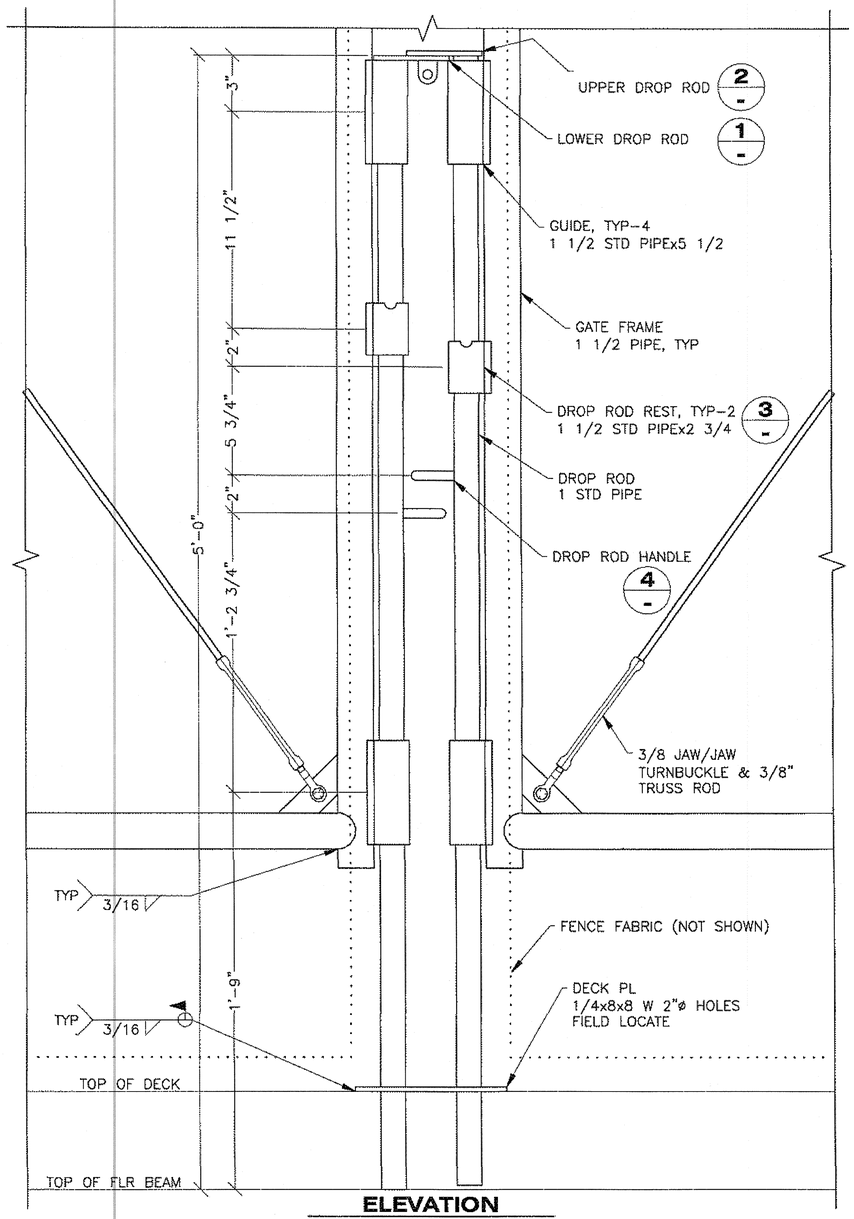

ELEVATION

2/20 DROP ROD LOCK ASSY

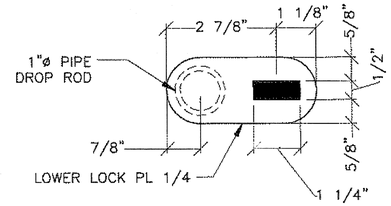

PLAN

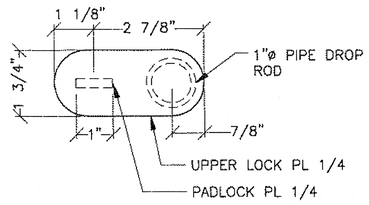

PLAN

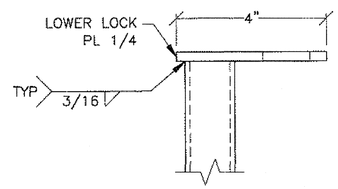

1/- ELEVATION DETAIL

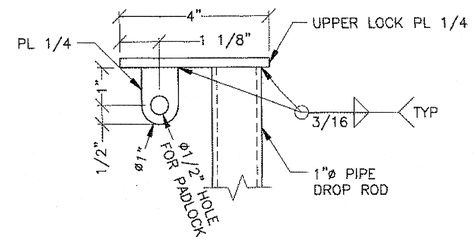

2/- ELEVATION DETAIL

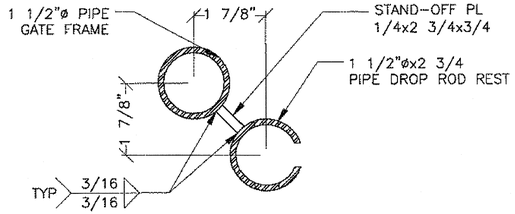

PLAN

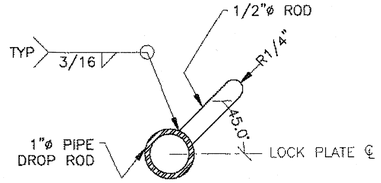

PLAN

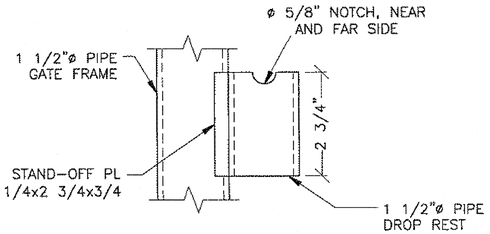

3/- ELEVATION DETAIL

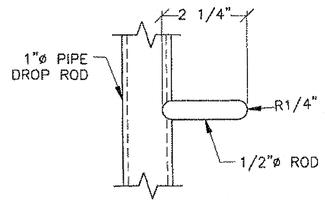

4/- ELEVATION DETAIL

Project As Built Drawings have been reviewed by the Project Engineer. To the best of his/her knowledge, they represent the project as constructed.

Proj. Eng _____ Date 6/21/17

DO NOT SCALE FROM THESE DRAWINGS USE DIMENSIONS

DESIGNED BY: T. DOGGETT	STATE OF ALASKA DEPARTMENT OF TRANSPORTATION & PUBLIC FACILITIES SOUTHEAST REGION
STATE OF ALASKA 49th Timothy H Doggett CE-9027 REGISTERED PROFESSIONAL ENGINEER 10/02/2012	**WRANGELL FERRY TERMINAL IMPROVEMENTS** **BRIDGE FENCE DETAILS 2**
CHECKED BY: K. MILLER	
DRAWN BY: STAFF	
PATH: Q:\WRG\69432\PLANSET\MF\18-20_SECURITY GATE.DWG	
TAB: 20 Tuesday, October 02, 2012 2:25:36 PM	

REVISIONS			PROJECT DESIGNATION	YEAR	SHEET NO.	TOTAL SHEETS
NO.	DATE	DESCRIPTION	69432 SHAK-MGE-STP-0943(25)	2012	20	21

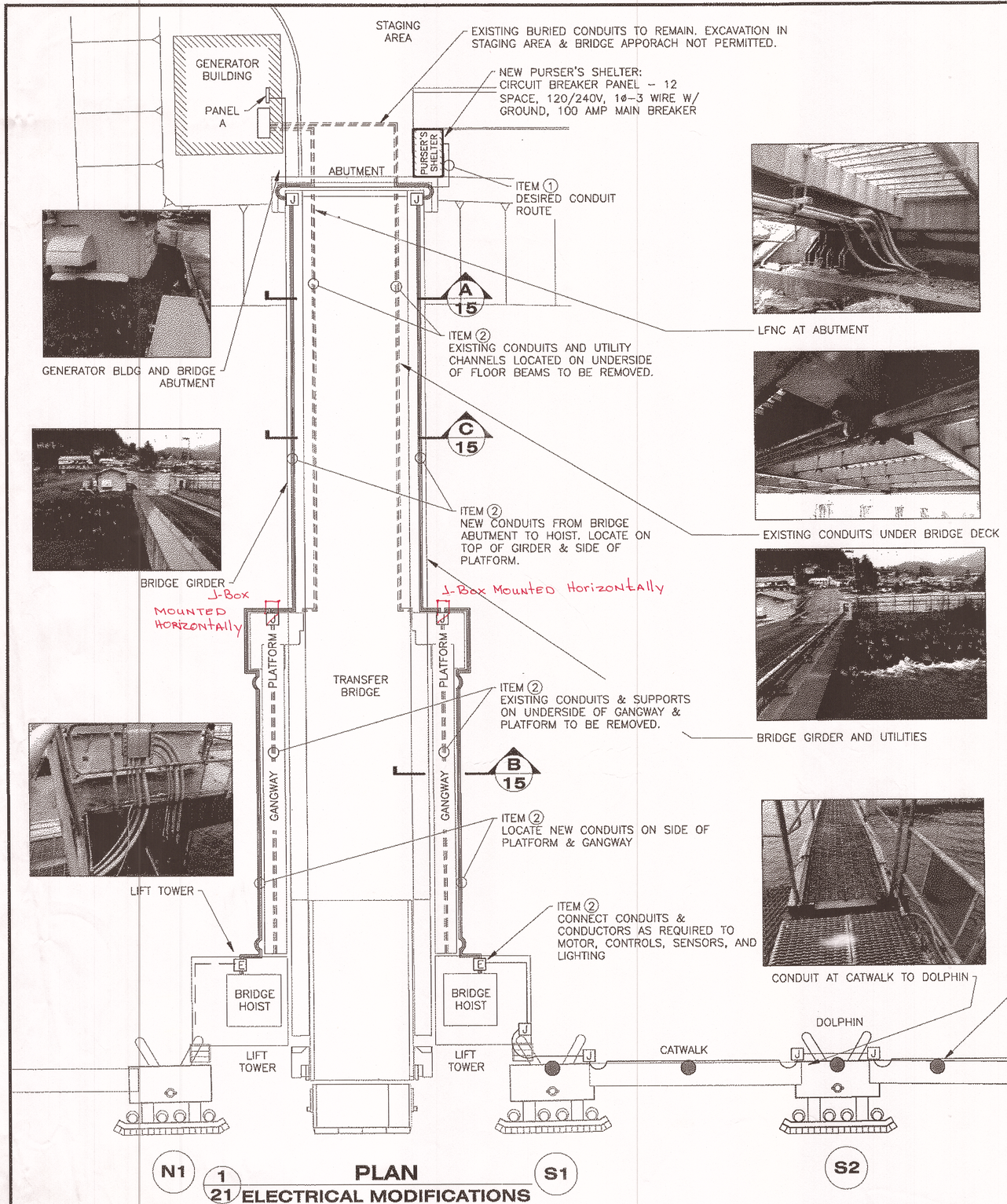

PLAN

21 ELECTRICAL MODIFICATIONS

ELECTRICAL RECONSTRUCTION NOTES:

THIS PLAN IS FOR INFORMATIONAL PURPOSES ONLY AND DEPICTS THE SCOPE OF THE ELECTRICAL WORK. THE CONTRACTOR SHALL PERFORM THEIR WORK IN ACCORDANCE WITH SECTION 662 OF THE SPECIFICATIONS.

THE CONTRACTOR IS REQUIRED TO EMPLOY AN ALASKA LICENSED PROFESSIONAL ELECTRICAL ENGINEER TO FURNISH SEALED DRAWINGS FOR REMOVING, REPLACING, AND RECONSTRUCTING THE ELECTRICAL WORK AS GENERALLY INDICATED ON THE PLANS.

IT IS THE PROJECT INTENT TO SALVAGE, MODIFY, AND RE–INSTALL EXISTING LIGHT FIXTURES, JUNCTION BOXES AND CONDUITS, UNLESS MATERIALS ARE FOUND TO BE UNSUITABLE OR OTHERWISE NOTED. REPLACE ALL CONDUCTORS WITHIN THE LIMITS OF WORK SHOWN. MATCH EXISTING CONDUCTOR QUANTITY, TYPE AND SIZE. FIELD VERIFY CONDUCTORS PRIOR TO ORDERING MATERIALS. FURNISH ALL NEW LFNC, COMPLETE WITH STAINLESS STEEL STRAIN RELIEF GRIPS WHERE MOVEMENT OF SUPPORTING STRUCTURES OCCURS.

ALL EXISTING CONDITIONS ARE NOT SHOWN HERE. REFER TO PLANSET DRAWINGS OF PROJECTS NO. F–095–3(1), STP–095–3(2), AND 67924 FOR AS–BUILT INFORMATION OF ELECTRICAL AND CONTROLS SYSTEMS. COPIES OF THESE DRAWINGS ARE AVAILABLE FROM THE DEPARTMENT. THOROUGHLY INSPECT AND DOCUMENT ALL EXISTING ELECTRICAL FEATURES PRIOR TO START OF WORK. NOTIFY THE ENGINEER IF DEFECTS ARE FOUND AND WHEN EXISTING MATERIALS CANNOT BE REUSED.

MAINTAIN AREA LIGHTING OF MOORING STRUCTURES, GANGWAYS, AND CATWALKS DURING DEMOLITION AND CONSTRUCTION. PROVIDE ALTERNATE POWER AS REQUIRED TO MAKE ALL LIGHTING FIXTURES FUNCTIONAL DURING AMHS OPERATIONS.

SCOPE OF WORK:

(1) FURNISH PURSER SHELTER ELECTRICAL POWER:
PROVIDE POWER FROM PANEL "A" IN GENERATOR BUILDING TO BREAKER PANEL IN NEW PURSER SHELTER. TERMINATE POWER TO EXISTING SHELTER.

(2) REPLACE CONDUITS AND CONDUCTORS FROM BRIDGE ABUTMENT TO BRIDGE HOISTS:
INSTALL NEW RMC AND LFNC FROM ABUTMENT BACKWALL, ALONG TOP OF BRIDGE GIRDERS, TO NEW JUNCTION BOXES ON GANGWAY PLATFORM, ALONG SIDE OF GANGWAY TO JUNCTION BOX ON LIFT TOWERS. INSTALL LFNC AT CONDUIT JOINTS BETWEEN THE ABUTMENT TO BRIDGE, BRIDGE TO GANGWAY, AND GANGWAY TO LIFT TOWER. REMOVE AND DISPOSE OF EXISTING CONDUIT AND CONDUCTOR.

(3) RECONSTRUCT LIGHTING SYSTEM FROM LIFT TOWER TO DOLPHIN S3:
EXISTING DOLPHIN S2 WILL BE DEMOLISHED AND REPLACED WITH A NEW STRUCTURE. CATWALKS S1–S2 AND S2–S3 WILL BE TEMPORARILY REMOVED FOR DEMOLITION AND RECONSTRUCTION. RE–INSTALL SALVAGED LIGHTING FIXTURE ON NEW DOLPHIN. CATWALK S2–S3 WILL BE SHORTENED, REQUIRING MODIFICATIONS TO THE LIGHTING SYSTEM. INSTALL LFNC AND JUNCTION BOX WITH TERMINAL STRIP AT BOTH ENDS OF CATWALKS.

LEGEND

- [E] JUNCTION BOX (EXISTING)
- [J] JUNCTION BOX (NEW)
- LIGHT FIXTURE (EXISTING)
- CONDUIT (EXISTING)
- CONDUIT (NEW)
- LIQUID TIGHT FLEX CONDUIT (NEW) (LFNC)

DO NOT SCALE FROM THESE DRAWINGS USE DIMENSIONS

Project As Built Drawings have been reviewed by the Project Engineer. To the best of his/her knowledge, they represent the project as constructed.

Proj. Eng [signature] Date 6/1/13

DESIGNED BY: T. DOGGETT

STATE OF ALASKA – 49th – Timothy H Doggett – CE–9027 – REGISTERED PROFESSIONAL ENGINEER – 10/02/2012

CHECKED BY: M. HANSEN

DRAWN BY: STAFF

PATH: O:\WRG\69432\PLANSET\MF\21– ELECTRICAL.DWG

TAB: 21 Tuesday, October 02, 2012 2:25:44 PM

STATE OF ALASKA
DEPARTMENT OF TRANSPORTATION & PUBLIC FACILITIES
SOUTHEAST REGION

WRANGELL FERRY TERMINAL IMPROVEMENTS

ELECTRICAL MODIFICATIONS

REVISIONS		
NO.	DATE	DESCRIPTION

PROJECT DESIGNATION	YEAR	SHEET NO.	TOTAL SHEETS
69432 SHAK–MGE–STP–0943(25)	2012	21	21